INSTRUCTION MANUAL

MODEL 154

PROGRAMMABLE WAVEFORM GENERATOR

WAVETEK
SAN DIEGO

9045 BALBOA AVENUE, SAN DIEGO, CALIFORNIA

INSTRUCTION MANUAL

MODEL 154

PROGRAMMABLE WAVEFORM GENERATOR

© - 1980 - Wavetek

THIS DOCUMENT CONTAINS INFORMATION PROPRIETARY TO WAVETEK AND IS SOLELY FOR INSTRUMENT OPERATION AND MAINTENANCE. THE INFORMATION IN THIS DOCUMENT MAY NOT BE DUPLICATED IN ANY MANNER WITHOUT THE PRIOR APPROVAL IN WRITING OF WAVETEK.

WAVETEK®

SAN DIEGO

9045 Balboa Ave., San Diego, CA 92123
P.O. Box 651, San Diego, Calif. 92112
Tel 714/279-2200 TWX 910-335-2007

Manual Revision 9/80
Instrument Release R-1/80

WARRANTY

All Wavetek instruments are warranteed against defects in material and workmanship for a period of one year after date of manufacture. Wavetek agrees to repair or replace any assembly or component (except batteries) found to be defective, under normal use, during this period. Wavetek's obligation under this warranty is limited solely to repairing any such instrument which in Wavetek's sole opinion proves to be defective within the scope of the warranty when returned to the factory or to an authorized service center. Transportation to the factory or service center is to be prepaid by purchaser. Shipment should not be made without prior authorization by Wavetek.

This warranty does not apply to any products repaired or altered by persons not authorized by Wavetek, or not in accordance with instructions furnished by Wavetek. If the instrument is defective as a result of misuse, improper repair, or abnormal conditions or operations, repairs will be billed at cost.

Wavetek assumes no responsibility for its product being used in a hazardous or dangerous manner either alone or in conjunction with other equipment. High voltage used in some instruments may be dangerous if misused. Special disclaimers apply to these instruments. Wavetek assumes no liability for secondary charges or consequential damages and, in any event, Wavetek's liability for breach of warranty under any contract or otherwise, shall not exceed the purchase price of the specific instrument shipped and against which a claim is made.

Any recommendations made by Wavetek for use of its products are based upon tests believed to be reliable, but Wavetek makes no warranty of the results to be obtained. This warranty is in lieu of all other warranties, expressed or implied, and no representative or person is authorized to represent or assume for Wavetek any liability in connection with the sale of our products other than set forth herein.

Product Improvement Notice

Wavetek maintains a continuing program to make improvements to their instruments that will take advantage of the latest electronic developments in circuitry and components.

Due to the time required to document and print instruction manuals, it is not always possible to incorporate these changes in the manual.

Wavetek has manufactured your instrument, using metal film 1% tolerance resistors in place of 5% carbon resistors, wherever practical. This results in a substantial improvement in the overall performance of your instrument. Therefore, there may exist a discrepancy between the resistor used to manufacture your instrument and the resistor called out in the Parts List and Schematic Diagrams in this manual.

If field replacement of an affected resistor does become necessary, replacement may be made in accordance with the manual call outs. Wavetek, however, recommends replacement with the same type of resistor used in the manufacture of your instrument, whenever possible.

PRODUCT IMPROVEMENT NOTICE

For greater flexibility in interconnections, all input BNC connectors are now duplicated to allow either front panel or rear panel connections. For correct operation, either the front or rear BNC of a given input can be used, but not both at the same time.

CONTENTS

SECTION 1 INTRODUCTION

1.1 GENERAL CAPABILITIES 1-1
1.2 PHYSICAL AND ELECTRICAL SPECIFICATIONS 1-1
1.3 PROGRAMMING 1-2

SECTION 2 INSTALLATION AND OPERATION

2.1 MECHANICAL INSTALLATION 2-1
2.2 ELECTRICAL INSTALLATION 2-1
2.3 OPERATING CONTROLS 2-1
2.4 INSTALLATION CHECKS 2-4
2.5 OPERATING PROCEDURE 2-5

SECTION 3 CIRCUIT DESCRIPTION

3.1 GENERAL DESCRIPTION 3-1
3.2 THEORY OF OPERATION 3-2

SECTION 4 CALIBRATION AND MAINTENANCE

4.1 INTRODUCTION 4-1
4.2 ACCESS INSTRUCTION 4-1
4.3 RECOMMENDED TEST EQUIPMENT 4-1
4.4 CALIBRATION INSTRUCTIONS 4-1
4.5 CORRECTIVE MAINTENANCE 4-4

SECTION 5 DIAGRAMS, ADDENDA, AND PARTS LISTS

5.1 DRAWINGS 5-1
5.2 ORDERING PARTS 5-1
5.3 ADDENDA 5-1
5.4 RECOMMENDED SPARE PARTS LIST 5-2

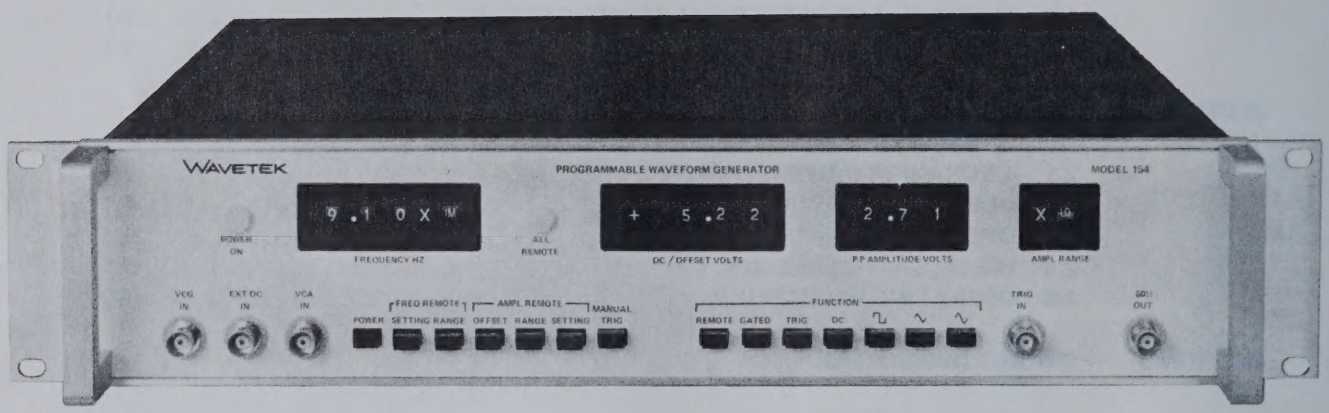

Figure i — Model 154 Programmable Waveform Generator

SCOPE OF THIS MANUAL

This manual provides descriptive material and instructions for the installation, operation, maintenance, and repair of this instrument. Wavetek's product improvement program ensures that the latest electronic developments are incorporated in all Wavetek instruments by the addition of circuit and component changes as rapidly as development and testing permit. Due to the time required to document and print instruction manuals, it is not always possible to incorporate the more recent changes in the released manual. In this case, data will be found on engineering change sheets at the rear of the manual. If no change sheets are included, the manual is correct as printed.

SECTION 1
INTRODUCTION

1.1 GENERAL CAPABILITIES

The Model 154 Programmable Waveform Generator is a precision source of sine, square and triangle waveforms covering a frequency range from 0.001 Hz to 10 MHz. In addition, a calibrated, programmable dc voltage output is provided. Amplitude, frequency and dc level may be digitally programmed with three digit resolution. Amplitude, frequency and dc level may also be modulated by an analog control voltage. The generator may be operated in continuous, triggered or gated modes. All controls may be locally or remotely programmed. All programming is DTL/TTL compatible.

1.2 PHYSICAL AND ELECTRICAL SPECIFICATIONS

1.2.1 Versatility

Output Signals
DC voltage, Sine ∿ , Square ⊓ and Triangle △ selectable, with auxiliary pulse output.

Frequency Range
0.001 Hz to 10 MHz in 10 decade ranges, with 3 digit resolution.

Main Output
DC voltage, ±0.1 Vdc to 10 Vdc at 100 mA maximum. Output impedance less than 1Ω. ∿ , ⊓ , △ , 0.001 V peak to peak to 10 V peak to peak into 50Ω load. Output impedance 50Ω. All waveforms may be offset 5 V above or below ground level with 3 digit resolution and selectable polarity. Signal level plus offset voltage not to exceed ±7.5 V peak into 50Ω load.

Auxiliary Output
50% duty cycle pulse at generator frequency. Fixed amplitude, 0 to +6 V peak into open circuit (0 to 3 V into 50Ω).

Operating Modes
Continuous, trigger, or gated mode, selectable. The generator may be triggered to produce single cycles by pushbutton trigger or external trigger command. Any discrete number of cycles will be produced by applying a gate signal for the desired burst width when in the gated mode. Minimum voltage required for trigger = +3 V. 50 V can be applied without damage.

Analog Modulation Control
The frequency, amplitude and dc offset level of the generator can be independently controlled by an external voltage. The control can be dc programming or wideband modulation.

1.2.2 Accuracy

Horizontal Precision
Frequency accuracy of the generator, whether programmed manually with front panel switches or remotely by external digital programming:

0.001 Hz to 100 kHz	±(1% of setting +1 digit)
100 kHz to 1 MHz	±(1% of full scale)
1 MHz to 10 MHz	±(2% of full scale)

Vertical Precision
∿ and ⊓ Waves

0.001 Hz to 100 kHz	±(1% of setting +1 digit)
100 kHz to 1 MHz	±(2% of setting +1 digit)
1 MHz to 10 MHz	±(5% of setting +1 digit)

△ Wave

0.001 Hz to 10 kHz	±(1% of setting +1 digit)

Vertical precision stated is for X1 amplitude multiplier. For X0.1, X0.01 and X0.001 add 1% per step.

DC Voltage
±(1% of setting +1% of full scale).

DC Offset
±(1% of setting +1% of range).

1.2.3 Waveform Purity

Stability

Short term	±0.05% for 10 minutes
Long term	±0.25% for 24 hours

Percentages apply to frequency, amplitude and dc offset stability.

Time Symmetry
1% to 500 kHz.

Amplitude Symmetry
All waveforms to 500 kHz are symmetrical about ground within ±1% of range maximum p-p amplitude.

Sine Distortion

10 Hz to 100 kHz	Less than 0.5%
0.001 Hz to 1 MHz	Less than 1.0%
1 MHz to 10 MHz	All harmonics at least −28 dB

Square Wave

Auxiliary output better than 5 nanosecond rise and fall time with less than 5% aberrations. Main output better than 35 nanosecond rise time with aberrations less than 5% ±10 mV.

Triangle Linearity

Greater than 99%, 0.01 Hz to 100 kHz.

DC Voltage

Ripple and noise less than 10 mV rms with generator idle.

1.2.4 Analog Control Characteristics

Voltage Control of Frequency (VCG)

Up to 1000:1 frequency change with an external voltage input of 5 volts. The upper frequency is limited to maximum of selected range. VCG input impedance 3.3 kΩ.

VCG Response

Bandwidth 100 kHz limited by a slew rate of 2% of range per microsecond.

VCG Linearity

1.0 Hz to 100 kHz	±0.2% of full scale
0.001 Hz to 1 MHz	±0.5% of full scale

Voltage Control of Amplitude (VCA)

Full amplitude control with an external voltage input of ±5 volts. The control is bipolar, that is, the amplitude can be controlled from maximum through null to range maximum at inverted phase. VCA input impedance is 3.3 kΩ.

VCA Response

Bandwidth 100 kHz limited by a slew rate of 2% of range per microsecond.

VCA Linearity

1% of full scale.

Voltage Control of DC Offset

All waveforms may be offset above or below ground level by an external voltage. Sensitivity of the signal is +2 or −2 volts offset per volt input dependent on dc polarity selected. Input impedance is 3.3 kΩ. Signal level plus offset voltage not to exceed ±7.5 volts peak into 50Ω load.

DC Offset Response

Bandwidth 100 kHz limited by a slew rate of 2% of range per microsecond.

DC Offset Linearity

1% of full scale.

1.2.5 Environmental

Specifications apply at 25°C ±5°C. For operation from 0°C to +50°C, derate all specifications by a factor of 2. Instrument may be stored from −50°C to +80°C without damage.

1.2.6 Mechanical

Dimensions

19-inch rack mount panel, 3½ inches high, 16½ inches deep.

Weight

15 lb. net, 24 lb. shipping.

Power

105 V to 125 V or 200 V to 250 V; 50 to 400 Hz; less than 45 watts.

NOTES

All specifications apply for control settings from 1.00 to 9.99.

On 1 MHz range only X1 and X0.1 amplitude settings apply.

1.3 PROGRAMMING

Description

All functions may be remotely controlled by BCD logic level programming. Front panel push button switches can be used to select local (front panel) control or remote control. When all controls are in the remote position, a logic voltage output is enabled for computer verification as well as illumination of a front panel light for visual verification. Signal ground and program ground are isolated.

Program Requirements

Frequency	3 digits	12 lines
Frequency Range	10 ranges	4 lines
Amplitude	3 digits	12 lines
Amplitude Range	4 ranges	2 lines
DC Level	3 digits	12 lines
DC Polarity	0, + or −	2 lines
Function	∿ , ⊓ , ⩘ or dc	2 lines
Mode	Cont. Trig or Gate	2 lines
Output	Front or rear panel	1 line
Return		2 lines
All remote	Output for verification	1 line
Total No. of Lines for Complete Control		52 lines

Program Transition Time

Frequency, amplitude and dc offset settings respond in less than 100 μs. Frequency range, function, offset polarity and attenuator respond in less than 3 ms.

CONTROL CONNECTOR PIN LAYOUT

Plug J2 Mating Connector
Amphenol 57-30360

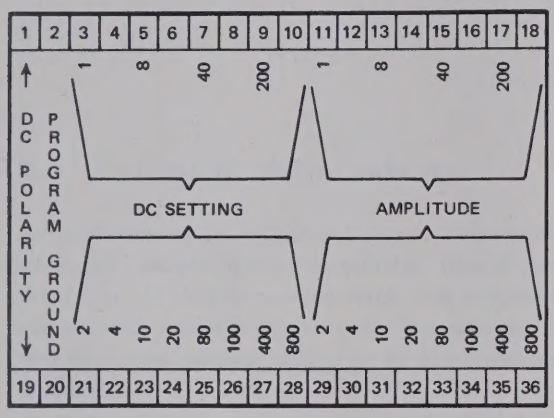

Plug J3 Mating Connector
Amphenol 57-30360

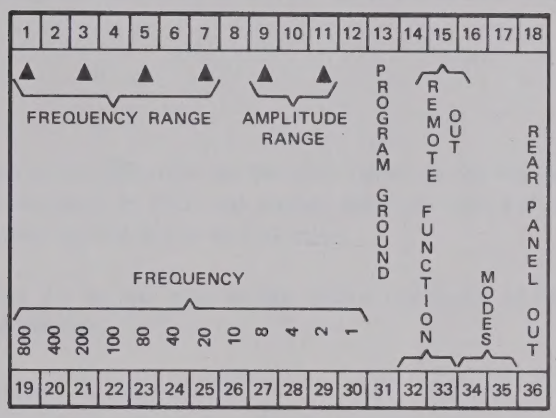

Standard Control Logic

Logic 1 = +2.4 V to +10 V, typical sink current 1.5 mA per line.

Logic 0 = −1 V to +1 V, open circuit voltage is approximately −0.7 V.

TRUTH TABLES WITH PIN ASSIGNMENTS

DC Polarity	Program (Pin No.) 19 1
+	0 0
0	0 1
−	1 0

Frequency Range	Program (Pin No.) 7 5 3 1
0.001	0 0 0 0
0.01	0 0 0 1
0.1	0 0 1 0
1.0	0 0 1 1
10	0 1 0 0
100	0 1 0 1
1 K	0 1 1 0
10 K	0 1 1 1
.1 M	1 0 0 0
1 M	1 0 0 1

Amplitude Range	Program (Pin No.) 11 9
0.001	0 0
0.01	0 1
0.1	1 0
1.0	1 1

Function	Program (Pin No.) 32 33
∿	0 0
∿	0 1
DC	1 0
⊓	1 1

Mode	Program (Pin No.) 35 34
Continuous	0 0
Gated	0 1
No Output	1 0
Trigger	1 1

SECTION 2
INSTALLATION AND OPERATION

2.1 MECHANICAL INSTALLATION

After unpacking the instrument, visually inspect all external parts for possible damage to switches, connectors, surface areas, etc. If damage is discovered, file a claim with the carrier who transported the unit. The shipping container and packaging material should be saved in case reshipment is required.

The front panel has been designed to allow this unit to be mounted in a standard 19-inch equipment rack. No mechanical installation is required when the instrument is to be used as a portable bench unit.

2.2 ELECTRICAL INSTALLATION

2.2.1 Power Connection

NOTICE

Unless otherwise specified at the time of purchase, all Wavetek Model 154 instruments are shipped from the factory with the power transformer connected for operation on a normal 115-volt ac line supply, and a ½ amp 115-volt slow blow line fuse.

To convert to 230 volts, set the slide switch at the rear of the instrument to 230, and replace the fuse with a slow blow fuse rated at ¼ amp at 230 volts.

Connect the ac line cord to the mating connector at the rear of the unit.

2.2.2 Signal Connections

Use 50Ω shielded cables equipped with female BNC connectors to distribute all RF signals when connecting this instrument to associated equipment.

2.3 OPERATING CONTROLS

The operating controls and electrical connections for the Model 154 are shown in Figures 2-1 and 2-2. Each of the following paragraph numbers corresponds to a number appearing in Figure 2-1, front panel, and Figure 2-2, rear panel.

1. **Power On Indicator** – The indicator is illuminated when the unit is on.

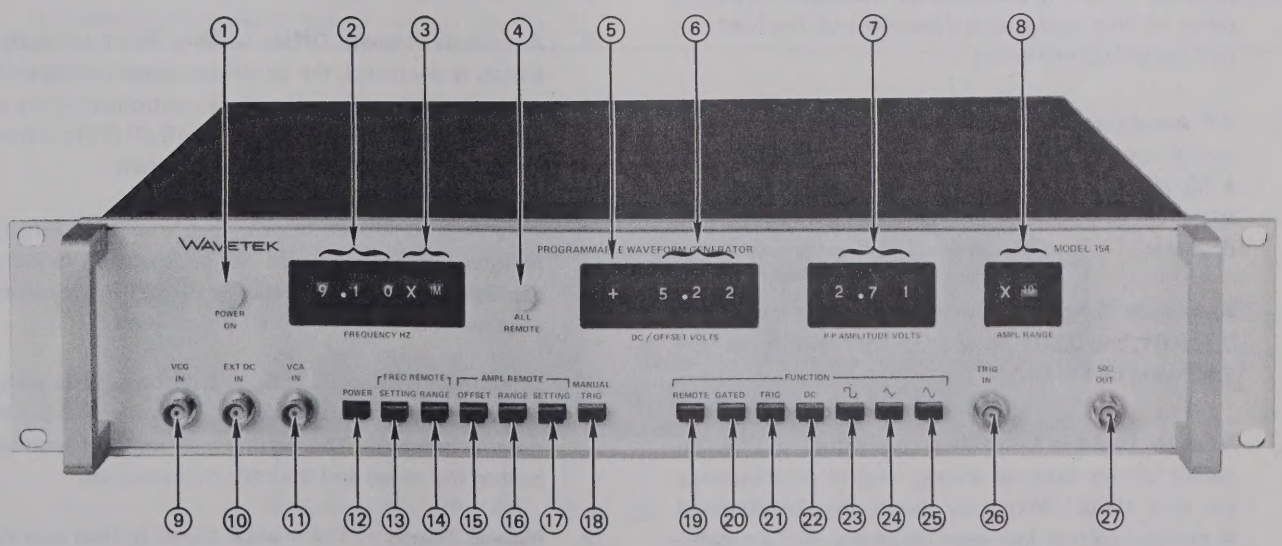

Figure 2-1. Operating Controls, Front Panel

2. **Frequency Hz Setting** – A three-digit thumbwheel switch is provided for output frequency selection. For the actual output frequency, this value is multiplied by the frequency Hz range multiplier (3).

3. **Frequency Hz Range Multiplier** – This thumbwheel switch has ten decade ranges from 1 millihertz to 1 megahertz. This value multiplied by the setting (2) gives the output frequency.

4. **All Remote Indicator** – When all the front panel remote push buttons are in (button Nos. 13, 14, 15, 16, 17 and 19, see Fig. 2-1), the indicator is illuminated. This means the generator is completely controlled by remote programming and independent of the front panel controls. In this condition a signal (> +3 Vdc) appears at pin 15 of plug J3 for computer notification.

5. **DC/Offset Polarity** – When in the dc mode, this switch determines the polarity of the dc level, either + or –. When in the "0" position, the dc level will always be zero. When in the ∿ , ⊓⊔ , or ⩘ function, this switch controls the polarity of the offset. When in the "0" position, the offset will always be zero.

6. **DC/Offset Volts** – This three-digit thumbwheel switch sets the dc level when in the dc mode, or the amount of dc offset into a 50Ω load for the waveform functions. The maximum voltage of the output amplifier is limited to ±7.5 volts into 50 ohms; therefore, the peak signal amplitude plus the offset should not exceed this limit or a distorted waveform will be the result. When in the dc mode, the output dc voltage is dependent only on the setting of this switch and independent of the p-p amplitude volt and amplitude range settings and also independent of the load current up to 100 milliamps.

7. **P-P Amplitude Volts** – This three-digit thumbwheel switch is used to set the peak to peak signal level into a 50 ohm load. It controls the level for the sine, triangle and square waves, but has no control in the dc mode.

8. **Amplitude Range** – This switch has four ranges, 1.0, 0.1, 0.01, and 0.001, allowing output amplitudes from 9.99 volts to 1 millivolt.

9. **VCG IN (Voltage Controlled Generator)** – This connector allows external analog control of frequency. Up to a 1000:1 frequency change may be obtained. A positive voltage increases frequency and a negative voltage decreases frequency. See section under OPERATION for details.

10. **EXT DC IN (External DC Offset Control)** – This input allows external analog control of dc offset or of dc voltage output. Sensitivity of the input is +2 or –2 volts offset per 1 volt input dependent on dc polarity selected; i.e., a gain of two. The small signal bandwidth is 100 kHz and the slew rate is 2% of range per microsecond.

    The EXT DC IN connector operates in conjunction with any manually or remotely programmed dc level or offset. The signals will be added or subtracted depending on the polarities. If the polarity switch (see 5) is in the "0" position, the EXT DC IN connector is disabled.

11. **VCA IN (Voltage Controlled Amplitude)** – The output amplitude can be modulated by an analog voltage input to this connector. This input signal is algebraically summed with the p-p amplitude setting on the front panel or with the remote program. This input may be used for studying most amplitude modulation techniques.

12. **Power** – Depressing this push button switch turns the unit on.

13. **Frequency Remote, Setting** – The frequency setting (see No. 2) will be controlled by the remote program when this switch is depressed. This does not affect the range multiplier. The setting is 0.00 if the control lines are open and the switch is depressed.

14. **Frequency Remote, Range** – Depressing this switch causes the frequency range to be selected by the remote program. The range will stay at X0.001 if the control lines are open and the switch is depressed.

15. **Amplitude Remote, Offset** – When this push button switch is depressed, the dc voltage output or signal dc offset, including the polarity, is controlled by the remote program. The setting will be +0.00 if the control lines are open and the switch is depressed.

16. **Amplitude Remote, Range** – The amplitude range is remotely controlled when the push button switch is depressed. The range will stay at X0.001 if the control lines are open and the switch is depressed.

17. **Amplitude Remote, Setting** – Depressing this switch causes the amplitude setting to be controlled by the remote program. The setting will be 0.00 with the button depressed and the control lines open.

18. **Manual Trigger** – The manual trigger button operates when the generator is in either triggered or gated mode (see Nos. 20 and 21). In the triggered mode,

one cycle of the selected waveform is generated each time the button is depressed. In the gated mode, the generator will continue to oscillate while the button is depressed. Upon releasing the trigger button, the generator will complete the last cycle and stop oscillating.

19. **Function Remote** – When this button is depressed, all of the modes under the function heading (Nos. 20 - 25) are under remote control. If this switch is depressed and the control lines are open, the output waveform will be a sine wave in the continuous running mode.

20. **Gated Mode** – When this switch is depressed, the generator may be started by applying a gating signal of at least 3 volts to the TRIG IN connector (see No. 26). Removing the gating signal causes the generator to complete the last cycle and stop. The generator may also be gated by depressing the manual trigger button (see No. 18).

21. **Trigger Mode** – In this mode the generator will produce one cycle of output for each trigger signal applied. The frequency of the trigger signal should be lower than the generator frequency. The trigger signal must be at least 3 volts. If both the gated and trigger switches are depressed, the generator will be in the triggered mode.

22. **DC** – Depressing this button causes a dc output to be present at the 50Ω output connector (see No. 27). The output impedance in the dc mode is 1 ohm. The maximum amount of dc is 10 volts and is set by the dc volts thumbwheel switch (see No. 6). The polarity is determined by the dc polarity switch (see No. 5). The polarity must be + or – for an output. Neither the p-p amplitude (see No. 7) nor the amplitude range multiplier (see No. 8) control has any effect on the dc output. The loading current should not exceed 100 milliamps.

23. ⊓⊔ **(Square Waveform)** – Depressing this button produces a square wave at the 50Ω output connector. Amplitude is controlled by the p-p amplitude volt and amplitude range switches (see Nos. 7 and 8), frequency by the frequency Hz setting and range multiplier switches (see Nos. 2 and 3).

24. ∧∨ **(Triangle Waveform)** – This switch applies a triangle waveform to the 50Ω output connector.

25. ∿ **(Sine Waveform)** – Depressing the button applies a sine wave to the 50Ω output connector.

26. **TRIG IN** – This connector accepts the trigger input signal for operation in either the trigger or gated mode (see Nos. 20 and 21). The trigger signal should be at least 3 volts. The input is dc coupled with 10K ohm impedance. Up to a 50 volt signal may be applied without damage.

27. **50Ω OUT** – This is the main output connector for all output signals. The signal will always be here unless the generator has been programmed to direct the output to the rear connector.

28. **AUX OUT** – This is an auxiliary pulse output. It is 0 to +6 volt pulse with 50% duty cycle. It can be used as a pulse, sync or squarewave output. It runs at the same frequency as the main generator. The rise and fall time is less than 5 nanoseconds.

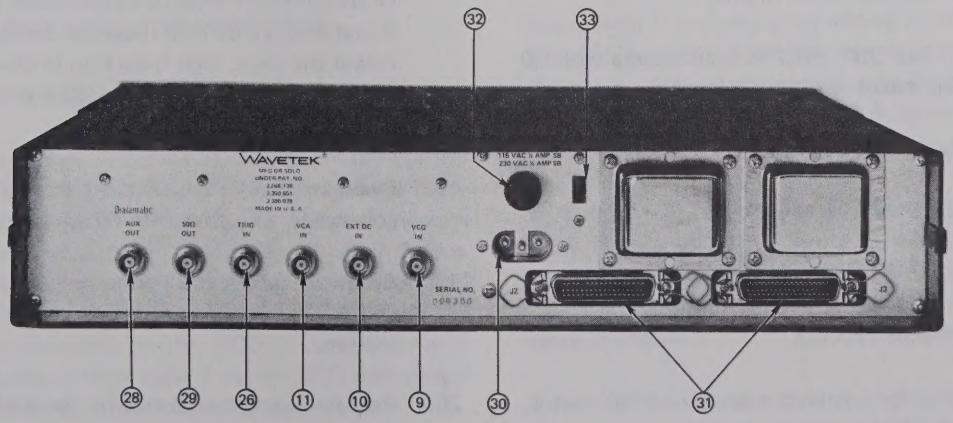

Figure 2-2. Operating Controls, Rear Panel

29. **50Ω OUT** – The main output is shifted to the rear output connector when pin No. 36 of connector J3 is programmed with a +2.4 V to +10 V signal. (See Section 1.3.)

30. **Power In Receptacle** – This connector accepts a female power cord for applying 120 or 240 volts ac.

31. **Remote Programming Connectors** – Remote control signals are input to the generator through these connectors. All control logic is BCD. (See Section 1.3 for pin assignments.) The mating connector (Part No. 57-30360) is manufactured by Amphenol.

32. **Line Fuse** – This fuse protects the instrument from ac line transients as well as shorts within the instrument. For 115 Vac operation, use a ½ amp slow blow fuse. For 230 Vac, use a ¼ amp slow blow fuse.

33. **115 - 230 Volt Switch** – This switch selects the power input voltage used. The instrument is normally shipped for 115 Vac and a ½ amp fuse. To convert to 230 Vac, set slide switch to 230 and install a ¼ amp slow blow fuse.

2.4 INSTALLATION CHECKS

This paragraph outlines a quick checkout procedure to determine if the instrument is operating properly. Field calibration and checkout instructions are given in Section 4 to determine compliance with electrical specifications. If electrical deficiencies exist, refer to the warranty on the back of the title page.

Use a Tektronix Model 454 oscilloscope (or equivalent) and a 10 MHz counter-timer with 4-digit resolution when performing these installation checks.

1. Connect the line cord to the ac line.

2. Connect the 50Ω OUT BNC to oscilloscope with 50 ohm cable terminated with 50 ohms.

3. Set frequency Hz to 1.00 X 1K.

4. Set DC/OFFSET VOLTS to 0 0.00.

5. Set P-P AMPLITUDE VOLTS to 1.00.

6. Set AMPL RANGE to X1.0.

7. Set generator up for complete manual control; that is, see that none of the remote buttons is depressed.

8. Depress ⊓ push button.

9. Depress POWER push button.

10. Observe a 1 volt p-p square wave at 1 kHz on the oscilloscope.

11. Depress ∧ and then ∿ push buttons. Observe triangle and sine waveforms, respectively.

12. Depress TRIG push button. Press MANUAL TRIG button several times and observe single cycle generation. Return TRIG button to out position.

13. Depress GATED push button. The generator should run as long as the MANUAL TRIG button is depressed. Return GATED button to out position.

14. With FUNCTION still on ∿ and amplitude at 1.00 X 1.0, set DC/OFFSET VOLTS to +5.00. Rotate most significant decade from 5 to 0. Change polarity to –. Rotate same switch from 0 to 5. Observe sine waveform being offset, first positively, then decreasing to zero and then increasing negatively over the range of ±5 volts. See Section 2.3, number 6, for signal plus offset limitations on the output amplifier. Return DC/OFFSET VOLTS to 0 0.00.

15. Set P-P AMPLITUDE VOLTS to 9.99. Rotate most significant decade from 9 to 0 and note proper operation of amplitude setting control.

16. Return P-P AMPLITUDE VOLTS to 9.99. Rotate AMPL RANGE control through all positions and note 20 dB change in amplitude per step. Return AMPL RANGE control to X1.0.

17. Remove 50 ohm terminator. Reconnect scope. Depress DC push button. Set DC/OFFSET VOLTS to +9.00. Observe 9 volt dc level. Rotate most significant decade of DC/OFFSET VOLTS thumbwheel switch from 9 to 0 and observe dc level decrease. Set polarity to – and rotate the same digit from 0 to 9. Observe dc level increasing negatively. Return DC/OFFSET VOLTS to 0 0.00.

18. Disconnect output BNC cable to oscilloscope and reconnect to a counter with 50 ohm terminator.

19. Rotate frequency setting and range multiplier switches and observe counter to verify proper frequency calibration.

20. Remote programming may be checked by applying dc levels (+2.4 to +10 V) to the appropriate pins of plugs J2 and J3 to verify that the output is correct. Use the Truth Tables with Pin Assignments in Section 1.3 to

determine which pins must receive a signal for a specified output.

2.5 OPERATING PROCEDURE

No preparation for operation is required beyond completion of the initial installation checks given in paragraph 2.4 of this manual. It is recommended that a one-half hour warm-up period be allowed for the associated equipment to reach a stabilized operating temperature and for the Model 154 to attain stated accuracies.

2.5.1 Operation as a Function Generator

1. Properly terminate the 50Ω OUT connector with 50Ω ±1% termination.

2. Select the desired waveform either from the front panel push buttons or by the remote program. If the remote mode is used, the FUNCTION REMOTE push button must be depressed.

3. Set FREQUENCY HZ setting and range multiplier for desired output frequency. If a remote program is used, be sure FREQ REMOTE SETTING and/or RANGE push buttons are depressed as required.

4. Set P-P AMPLITUDE VOLTS and AMPL RANGE multiplier for desired output amplitude. If a remote program is used, depress either or both AMPL REMOTE RANGE and SETTING push buttons as desired.

5. A positive or negative dc offset may be applied to the waveform by setting the DC/OFFSET VOLTS to the desired level. The peak signal value plus the offset cannot exceed ±7.5 volts. If it is desired to control the offset by the remote program, the AMPL REMOTE OFFSET push button must be depressed.

2.5.2 Operation as a Voltage Controlled Generator

The VCG input connector can be used to externally control the frequency of the generator. If a positive voltage is applied to the VCG input terminal, the frequency will increase from the dial setting. A negative voltage will cause the frequency to decrease from the dial setting. The VCG range of the Model 154 is 1000:1. The nomograph of Figure 2-3 shows the characteristics of the VCG circuit. Column A gives the frequency setting, column B, the VCG voltage and column C, the resultant frequency of the generator.

The following are examples of setting up the generator for several ranges of frequency change.

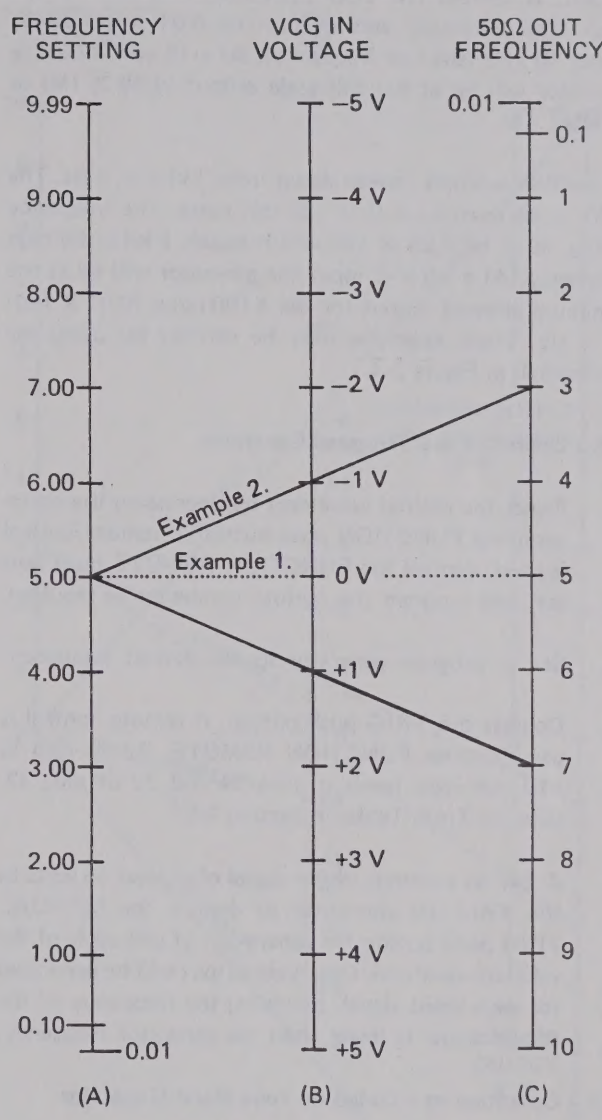

Figure 2-3. VCG Voltage-to-Frequency Nomograph

In example 1, the frequency setting is 5.00 and 0 volts VCG input voltage is applied. Extend a straight line from 5.00 (frequency setting) through 0 volts (VCG voltage). The result is an output frequency of 5 (multiplied by the range multiplier).

In example 2, the frequency setting is 5.00 and a varying VCG voltage of −1 V to +1 V is applied. By extending straight lines through the appropriate position it can be seen that the frequency will vary from 3 to 7 (multiplied by the range multiplier).

To obtain a maximum frequency change of 1000:1 the low frequency must have a setting of 0.01 X the multiplier. The maximum top frequency will then be 9.99 X the multiplier, thus giving a 1000:1 change.

For example, suppose an increasing sweep from 10 kHz to 10 MHz is desired. The VCG input must be a 0 to +5 volt ramp. The frequency setting must be 0.01 X 1M which equals 10 kHz (the low frequency). At a +5 volt input the generator will be at the full scale output (9.99 X 1M) or 10 MHz.

As another example, sweep down from 1 kHz to 1 Hz. The VCG input must be a 0 to −5 volt ramp. The frequency setting must be 9.99 X 100 which equals 1 kHz, the high frequency. At a −5 volt input the generator will be at the minimum allowed output for the X100 range (0.01 X 100) or 1 Hz. These examples may be verified by using the nomograph in Figure 2-3.

2.5.3 Operation as a Triggered Generator

1. Select the desired waveform by depressing the corresponding FUNCTION push button. If remote control is used, depress the FUNCTION REMOTE push button and program the remote connector as required.

2. Set or program generator to the desired frequency.

3. Depress the TRIG push button. If remote control is used, depress FUNCTION REMOTE. Apply +2.4 to +10 volt logic levels to pins 34 and 35 of plug J3. (See the Truth Tables in Section 1.3.)

4. Apply an external trigger signal of at least +3 volts to the TRIG IN connector or depress the MANUAL TRIG push button for generation of one cycle of the selected waveform. One cycle output will be generated for each input signal, providing the frequency of the trigger signal is lower than the generator frequency.

2.5.4 Operation as a Gated or Tone Burst Generator

1. Select the desired waveform by depressing the corresponding FUNCTION push button. If remote control is used, depress the FUNCTION REMOTE push button and program the remote connector as required.

2. Set or program generator to the desired frequency.

3. Depress the GATED push button. If remote control is used, depress FUNCTION REMOTE. Apply +2.4 to +10 volt logic level to pin 34. No signal is applied to pin 35.

4. Apply an external gating signal of at least +3 V to the TRIG IN connector or depress the MANUAL TRIG button. A gated or tone burst signal will be generated as long as gating signal is applied to TRIG IN or MANUAL TRIG is depressed.

2.5.5 Operation as a DC Voltage Source

Model 154 may be used as a calibrated dc voltage source not to exceed 100 mA of current as follows:

1. Set the generator in the triggered mode either by depressing the TRIG push button or by the remote program. See 2.5.3, Step 3. This inhibits the generator from running which minimizes the noise content of the dc.

2. Set the function to DC either locally or by remote program. The output impedance at the 50Ω OUT connector is now less than 1 ohm.

3. Connect the 50Ω OUT connector to the device under test.

4. Set or program the DC/OFFSET VOLTS to the desired value, either positive or negative. The dc voltage ranges from 9.99 to 0.01. The ripple and noise is less than 10 mV with the generator idle.

2.5.6 Operation as an Amplitude Modulated Generator

The VCA IN connector provides an input for amplitude modulation. In using the VCA capability of the generator, refer to Figure 2-4.

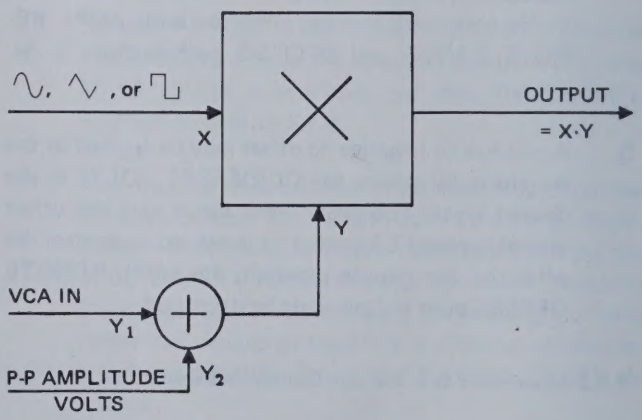

Figure 2-4. X-Y Multiplier Block Diagram

The output of the generator is the product of the X and Y inputs; that is, the generator signal times the sum of the VCA IN plus the p-p amplitude, or output = $X(Y_1 + Y_2)$. Y_2 is always a positive dc level, internal to the generator, which controls the output amplitude, if there is no VCA IN signal. Any VCA input, whether dc or ac, adds to Y_2. If the sum of Y_1 and Y_2 exceeds the output capabilities of the generator, a clipped waveform will result.

The modulated output of the generator with several different VCA input conditions is shown in Figure 2-5. The P-P AMPLITUDE VOLTS control is assumed to be 0.00.

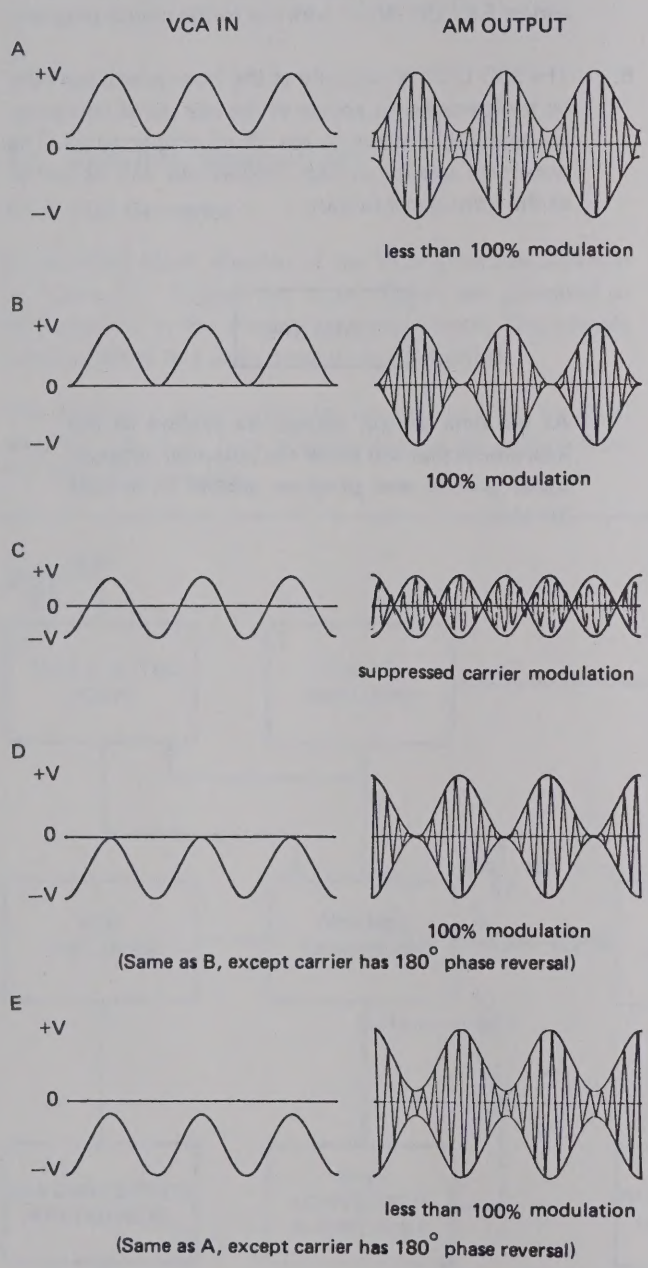

Figure 2-5. Amplitude Modulation Input and Resultant Output

The nomograph in Figure 2-6 is provided to determine the peak limits of the amplitude modulated output.

Example 1 displays suppressed carrier modulation. See Figure 2-5, Diagram C, for a display of the VCA input waveform and the resultant modulated output.

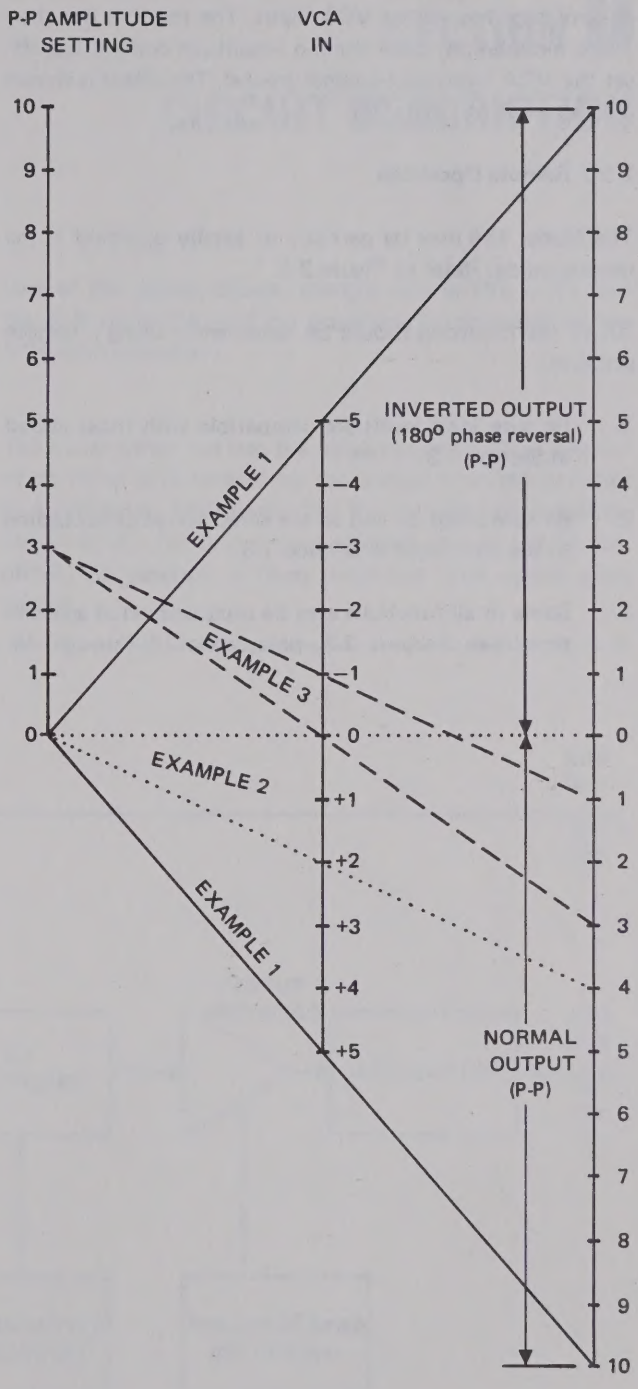

Figure 2-6. Amplitude Modulation Nomograph

Example 2 shows 100% modulation. The envelope is 4 volts peak to peak. The input sine wave is 2 volts p-p with the negative peak equal to zero as referenced to signal ground of the Model 154. See Figure 2-5, Diagram B, for waveform display.

Example 3 shows the effect of using the p-p amplitude control together with a VCA input. The result is less than 100% modulation, since the p-p amplitude control has offset the VCA input above signal ground. The effect is shown in Diagram A of Figure 2-5.

2.5.7 Remote Operation

The Model 154 may be partially or totally operated in the remote mode. Refer to Figure 2-1.

All of the following should be noted when using a remote program.

1. Be sure logic levels are compatible with those stated in Section 1.3.

2. Be sure plugs J2 and J3 are wired correctly according to the pin layout in Section 1.3.

3. Some or all functions may be programmed at any one time. See Section 2.3, paragraphs 13 through 19.

4. When the generator is completely under remote control, a front panel light will be illuminated as well as a signal generated at pin 15 of J3.

5. The analog program applied to the VCG IN, VCA IN and/or EXT DC IN are additive to the digital program.

6. The 50Ω OUT is normally at the front panel, but may be programmed to appear at the rear panel connector by applying a signal to pin 36 of connector J3. The waveform quality at high frequencies will be better at the front panel output.

CAUTION

At no time should voltage be applied to the instrument that will cause the potential between signal ground and program ground to exceed 10 Vdc.

SECTION 3
CIRCUIT DESCRIPTION

3.1. GENERAL DESCRIPTION

3.1.1 VCG Generator

A simplified block diagram of the VCG generator is shown in Figure 3-1. Triangle and square signals are generated simultaneously in the triangle generator circuit. The triangle is then applied to a sine converter and amplified.

The frequency is controlled by the current from the VCG amplifier which in turn is controlled by the voltage from the VCG D/A converter.

One of the signals, square, triangle, sine or DC, is fed into the X-Y multiplier and the amplitude is controlled by the VCA D/A converter.

The signal is then fed into the output amplifier. The amount of dc offset is controlled by the voltage from the dc offset D/A converter. The square wave from the triangle generator circuit is also fed into a fast switching circuit, a pulse amplifier, to generate a fixed amplitude fast square wave output.

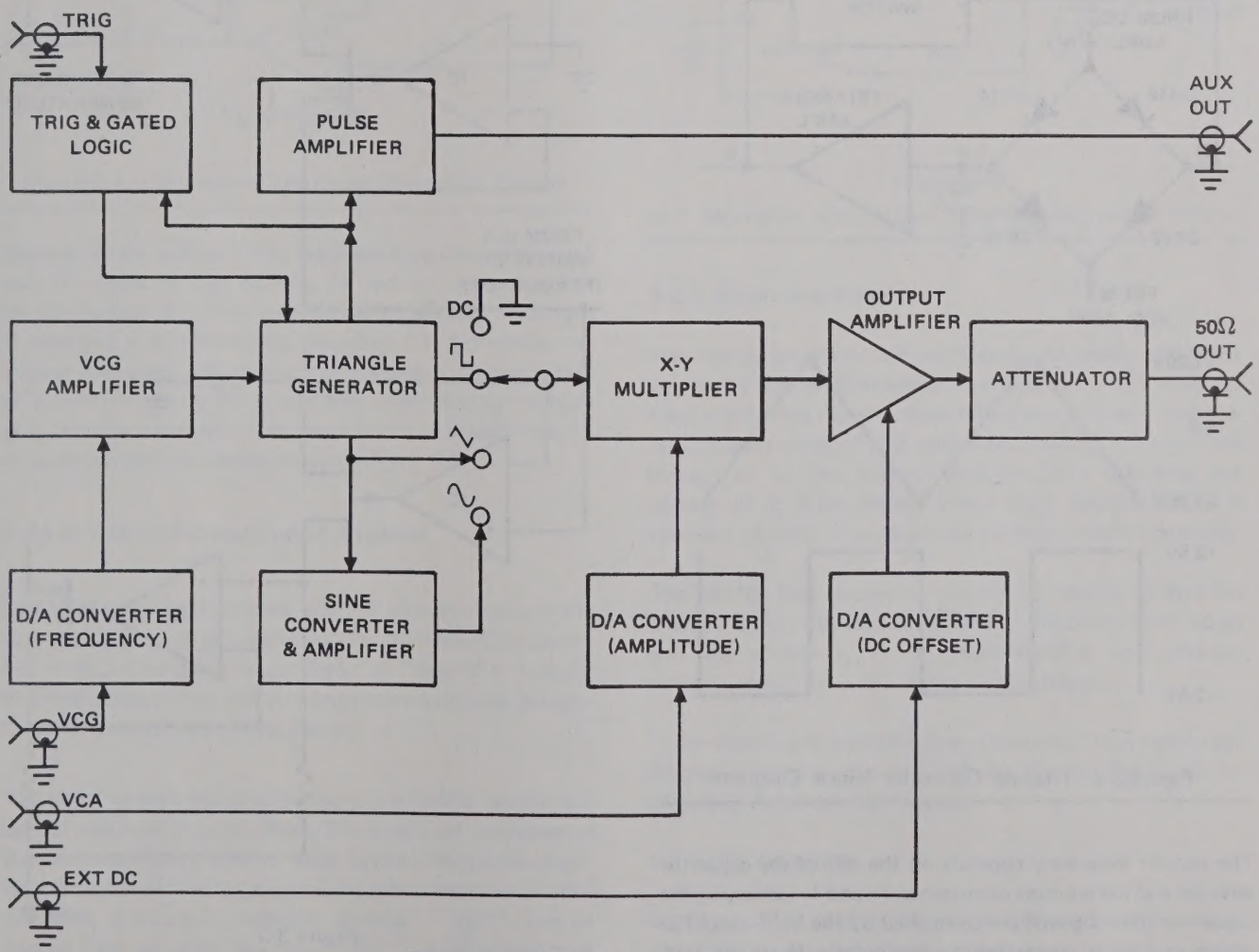

Figure 3-1. VCG Generator Block Diagram

3.2 THEORY OF OPERATION

3.2.1 Triangle Generator

When the voltage at point D is positive, the diodes CR15 and CR16 are reverse biased and CR14 and CR17 are forward biased. See Figure 3-2. Therefore, the current I+ is charging the capacitor C which causes the voltage at points A and B to rise. As soon as the voltage at point B reaches +1.25 V, the output of the hysteresis switch will switch negative and thus reverse the current flow. The current I− is drawn from capacitor C. Again, the hysteresis switch will switch positive when the voltage at B is below −1.25 V. Thus, triangle and square signals are generated simultaneously.

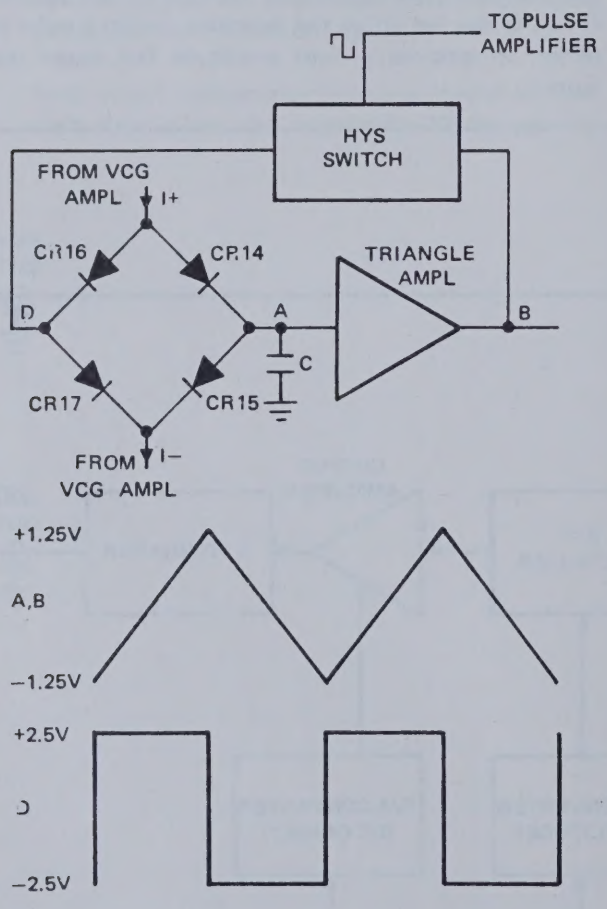

Figure 3-2. Triangle Generator Block Diagram

The output frequency depends on the size of the capacitor selected and the amount of currents, I+ and I−, charging the capacitor. The currents are controlled by the VCG amplifier which in turn is controlled by the voltage from the D/A amplifier and VCG input.

3.2.2 VCG Amplifier and Current Sources

The voltage used to control the output frequency from the D/A amplifier is applied to point A of the VCG amplifier. See Figure 3-3. Two ICs are used to shift the control voltage ground reference to the power supply reference. The other two ICs are the current source generators. The two current outputs are fed to the triangle generator.

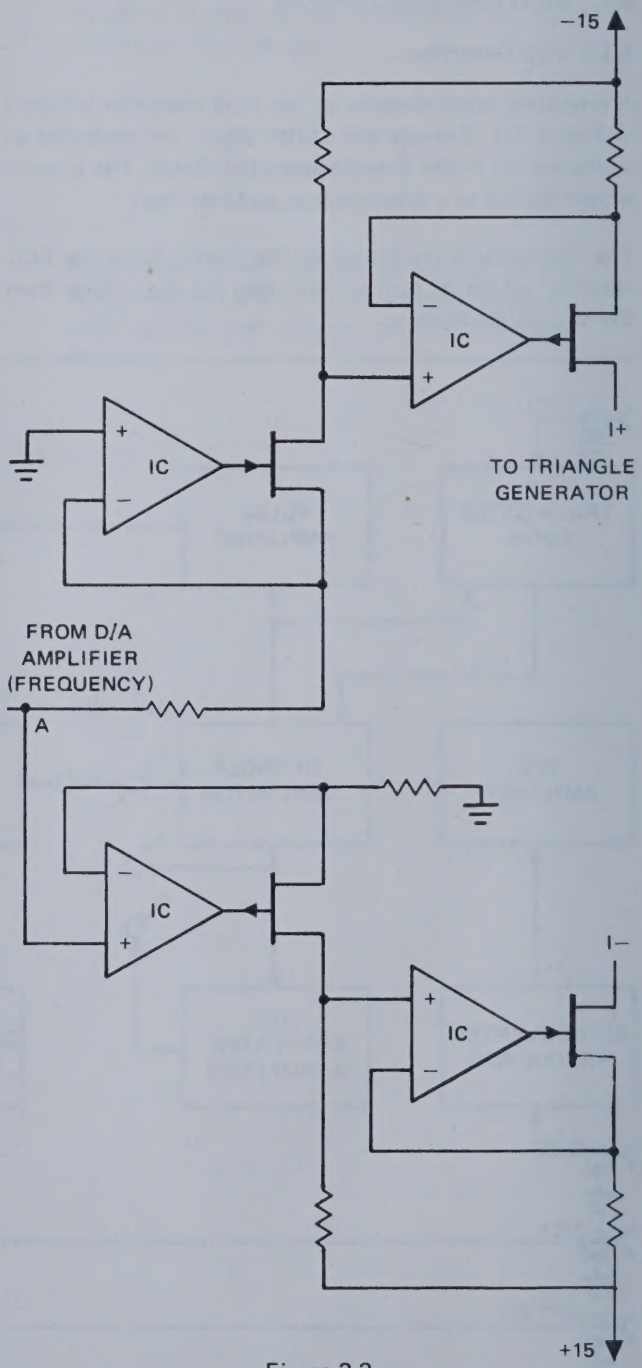

Figure 3-3.
VCG Amplifier and Current Source Simplified Circuit

3.2.3 Capacitance Multiplier

Frequency ranging is achieved by selecting different capacitors. For frequency ranges at X1 Hz or below, large capacitors are necessary and, therefore, impractical. Instead, a capacitance multiplier circuit is used, and ranging is achieved by changing the multiplication factor which is equivalent to the ranging resistors. The simplified circuit is shown in Figure 3-4.

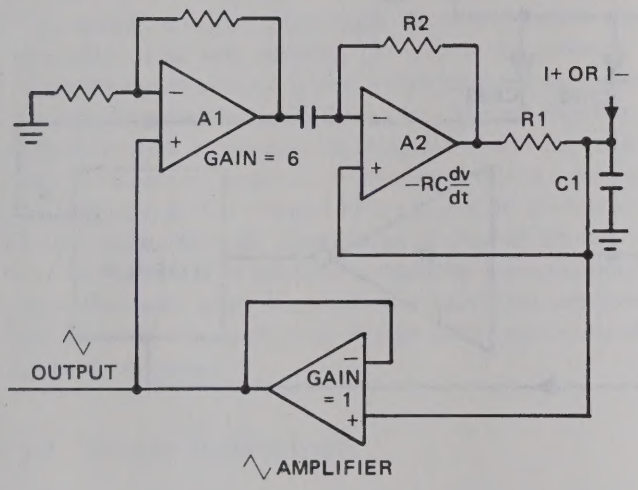

Figure 3-4. Capacitance Multiplier Simplified Circuit

Because of the nature of the feedback loop connection, A1 and A2, most of the current, I+ and I–, will be drawn by A2 through R1. Only a very small percentage of current is changing and discharging capacitor C1. Therefore, the output frequency will appear much slower. The percentage of current drawn by A2 is precisely controlled by the loop gain and time constant of the capacitance multiplier circuit. Frequency ranging is achieved by changing R2.

3.2.4 X-Y Multiplier and Output Amplifier

One of the signals is selected and fed into one input of the X-Y multiplier, and a control voltage from the D/A amplifier is fed to the other input. Refer to Figure 3-5. The differential output from the X-Y multiplier is directly proportional to the product of two inputs.

The signal is then fed into the output amplifier which consists of two inverting amplifiers. The combined operation of the two amplifiers is exactly equal to one differential amplifier. Because of the large common mode rejection of this amplifier, the output amplifier ground, " ⏚ ", can be floated from all other grounds, " ⏚ ". A separate power supply would be required in this case.

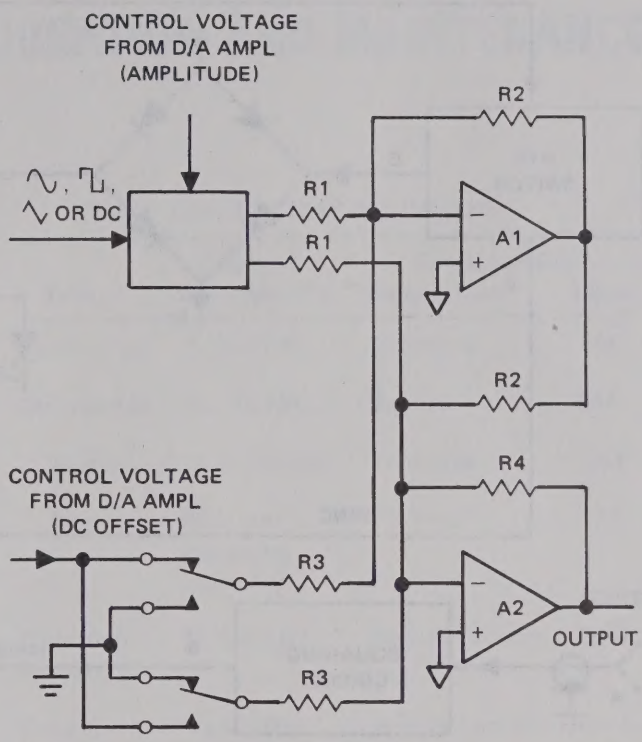

Figure 3-5.
X-Y Multiplier and Output Amplifier Simplified Circuit

3.2.5 Trigger Gated Modes

The triangle generator will oscillate continuously only if the voltage at **G** is negative which reverse biases CR11. Refer to Figure 3-6. This requires that the voltage at **E** or **F** be negative. If both voltages at **E** and **F** are positive, then so is the voltage at **G**. The current through CR11 will keep the voltage of **C** from falling below zero, because CR12 is clamped at zero. This stops the generator from oscillating.

The JK flip-flop is used to control the timing so that the triangle will always stop at the end of the cycle. The triangle will stop at time t_3, if the trigger signal is reset between times t_1 and t_3 as shown in the timing diagram.

If the signal at **B** is differentiated before it is applied to the JK flip-flop, only one cycle of the triangle signal will be generated for each trigger input.

3.2.6 D/A Converter

Diode gates are used to switch the voltage through weighting resistors into the summing node of an amplifier. Refer to the D/A Converter Schematic.

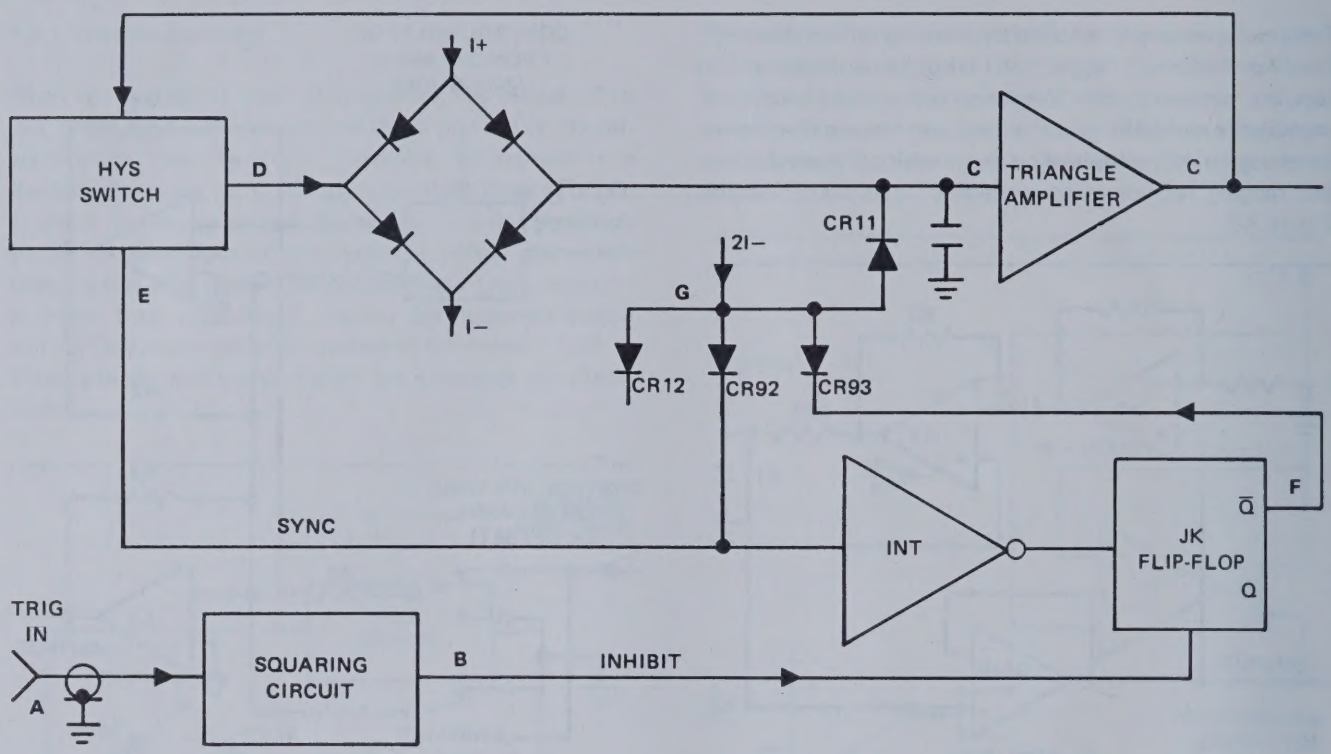

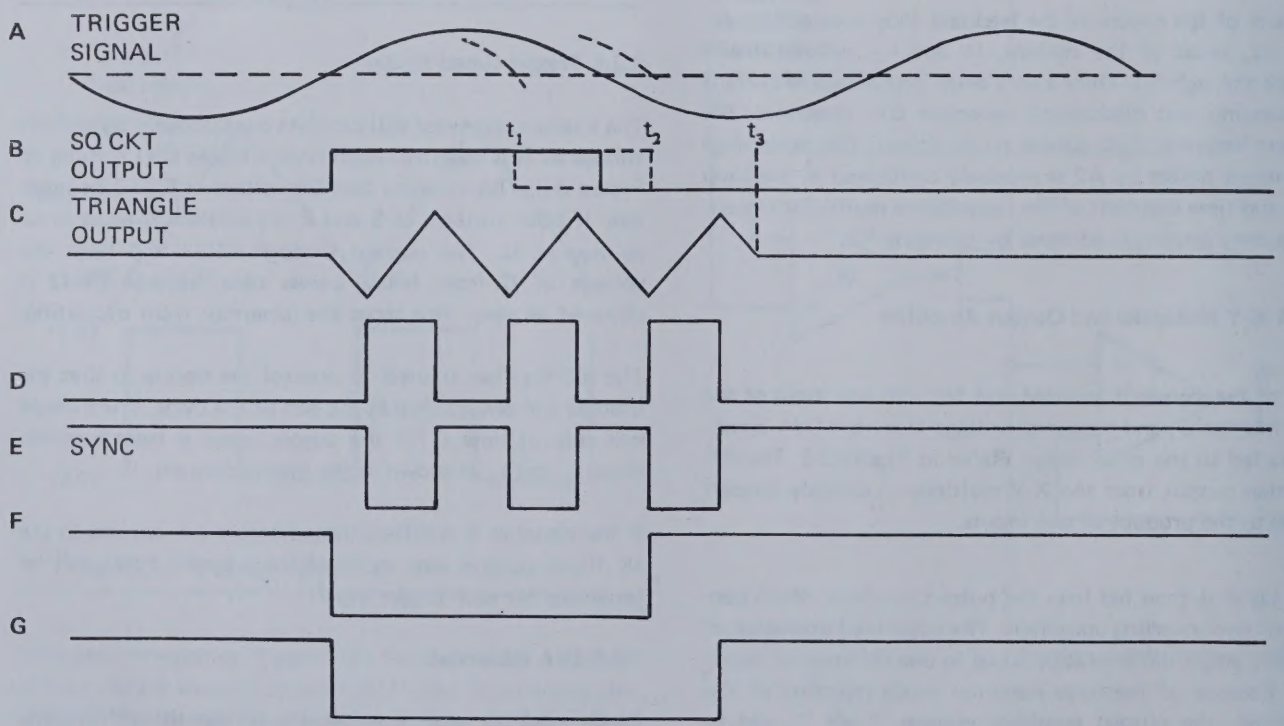

Figure 3-6. Trigger Gated Block and Timing Diagrams

SECTION 4

CALIBRATION AND MAINTENANCE

4.1 INTRODUCTION

This section provides instructions for testing, calibrating, troubleshooting, and repairing the Model 154 generator. The instructions are concise and written for the experienced electronics technician or field engineer. Wavetek maintains a factory-repair department for those customers not possessing the necessary personnel or test equipment to maintain the instrument. If an instrument is returned to the factory for calibration or repair, a detailed description of the specific problem should be attached to facilitate the turnaround time. The main board test point and adjustment locations are shown on the board itself, and all points are illustrated in the data package.

4.2 ACCESS INSTRUCTION

Removal of the top dust cover affords quick access to all the components within the unit. However, it may be necessary to remove the bottom dust cover to replace the components.

An extender board (located in the front left corner) is provided to allow testing and repair of individual boards while still in the circuit. To remove the extender board, remove the two screws located on the side panel.

4.2.1 Removing the Dust Cover

1. Unplug the power cord.
2. Unscrew two captive screws on top cover.
3. Remove top cover.
4. Follow same procedure for bottom cover removal.

4.3 RECOMMENDED TEST EQUIPMENT

Table 4-1 contains a list of recommended test equipment. Any test equipment having equivalent accuracies may be substituted for those listed.

Table 4-1. TEST EQUIPMENT

Type	Required Characteristics	Recommended Manufacturer	Model
Oscilloscope	To 250 MHz	Tektronix	454
Oscilloscope	To 30 MHz	Tektronix	544
Plug-In	Dual Channel	Tektronix	1A1
Plug-In	Peak mV measuring capability	Tektronix	1A5
Distortion Analyzer	To 600 kHz	Hewlett-Packard	334A
Spectrum Analyzer Display	To 50 MHz	Hewlett-Packard	141S
IF Section		Hewlett-Packard	8552A
RF Section		Hewlett-Packard	8553L
Differential Voltmeter	Microvolt dc measurement		
Counter-Timer	To 10 MHz 0.1% of reading accuracy		

4.4 CALIBRATION INSTRUCTIONS

The following paragraphs provide complete sequential calibration procedures for the Model 154 generator.

NOTE

The entire calibration procedure must be read first to determine initial control settings and test equipment connections required before attempting recalibration. The steps of this procedure should be performed in the sequence given, and the parts within each step should also be performed in the same sequence given. **Fold out page 4-21 for Adjustment and Test Point Locations.**

NOTE

Unless otherwise noted, all measurements made at the 50Ω OUT connector should be terminated into a 50Ω load when in ∿ , ∧∨ , or ⊓⊔ modes and unterminated when in DC.

4.4.1 Preliminary Procedures

Allow the unit to warm up for at least 30 minutes. Start the calibration by setting the front panel switches and controls as follows:

POWER Switch . . . . . ON (IN)
FUNCTION Switch . . . . . ∿
All other push button switches should be in the OFF (OUT) position.
FREQUENCY . . . . . 9.99 X 100
DC/OFFSET 0 0.00
AMPLITUDE . . . . . 5.00 X 1.0

4.4.2 Power Supply Regulation

1. Connect a voltmeter to R5 (marked "+15 V" in ∧∨ AMPL section of the main board), and ground at TP1 (C15).

2. Adjust voltage to +15 Vdc ±20 mV, using R21 on the 15 V power supply board.

3. Check for approximately −15 volts at R7 (marked "−15 V" in ∧∨ AMPL section of the main board).

4. Check for approximately +24 volts at R4 and −24 volts at R3 in ∧∨ AMPL section of the main board. Test points are marked "+24 V" and "−24 V".

5. Connect a voltmeter to +23 volts across C72 (OUTPUT AMPL section of main board). Adjust voltage to +23 Vdc ±20 mV using R21 on the 23 V power supply board.

6. Check voltage across C70 for −23 Vdc ±400 mV.

7. Check the +6 volt supply in AUX AMPL section of main board and ground at TP1 (C15). Voltage should be +6 Vdc ±200 mV.

4.4.3 Triangle Amplitude Adjustment

1. Use a type W or 1A5 plug-in module with the scope for this calibration. Connect the oscilloscope probe (X1) to output of the triangle amplifier at TP2 and ground at TP1 on the main board. Make sure the frequency setting is at 9.99 X 100 Hz.

2. Adjust the positive peak of the triangle to +1.25 V ±5 mV using R21 on the main board.

3. Adjust the negative peak of the triangle to −1.25 V ±5 mV using R11 on the main board.

4.4.4 Frequency Calibration

1. Set function to ⊓⊔ and connect the main output to the scope.

2. Set frequency to 0.09 X 0.1M. Alternately short and open VCG IN to ground and adjust R34 on the D/A amplifier board until no frequency shifting can be observed on the scope.

3. Connect the main output to a counter and verify that the shifting is less than 100 Hz.

4. Set frequency to 0.01 X 10K. Adjust R29 on the D/A amplifier board for 100 Hz ±15 Hz. (VCG should not be shorted to ground.)

5. Connect the output to an oscilloscope. Adjust the time symmetry to within 1% using R7 on the VCG board. A dual channel counter set in the B−A mode may also be used for this calibration. By alternately changing the slopes from positive to negative on both channels, the asymmetry may be measured.

6. Set frequency to 9.99 X 10 kHz. Adjust output frequency to 99.9 kHz ±100 Hz using R40 on D/A amplifier board.

7. Set frequency to 8.99 X 1 MHz. Adjust frequency to 8.99 MHz ±25 kHz using C4 on main board. Trim C2 if necessary.

8. Set frequency to 9.99 X 10K. Re-adjust frequency to 99.9 kHz ±100 Hz using R40 on D/A amplifier board. Trim R31 on D/A amplifier board if necessary.

9. Set frequency to 0.01 X 10 kHz. Re-adjust output frequency to 100 Hz ±15 Hz using R29 on D/A amplifier board.

10. Check frequency accuracy from 0.99 X 1M to 9.99 X 1M. All frequencies should be within ±1.8% of full scale. If not, re-adjust C4. If adjusting C4 does not help, try to trim capacitors C16, C17, C22 and C23 on the main board. Add 5 to 10 pF capacitance at locations C16 and C23, if frequency at the 9.99 X 1 MHz setting is too low. Reduce 5 to 10 pF of capacitance at both C17 and C22, if frequency at the 9.99 X 1 MHz setting is too high.

11. Set frequency to 9.99 X 0.1M. Adjust frequency to 999 kHz ±1 kHz using C6 on the main board. Trim C8 if necessary.

12. Set frequency to 9.99 X 1K. Adjust output frequency to 9.99 kHz ±10 Hz using R39 on D/A amplifier board.

13. Set frequency to 9.99 X 100. Adjust output frequency to 999 Hz ±1 Hz (or period to 1001 μs ±1 μs) using R38 on the D/A amplifier board.

14. Set frequency to 9.99 X 10. Adjust output frequency to 99.9 Hz ±0.1 Hz (or period to 10.01 ms ±10 μs) using R37 on the D/A amplifier board.

15. Connect a scope probe to the output of the triangle amplifier at TP2 and ground at TP1 on the main board.

16. Set generator to TRIG mode with front panel switch. Set frequency to 9.99 X 10 Hz. Adjust the dc level to 0 Vdc ±3 mV using R2 on the main board.

17. Set generator back to continuous running, frequency to 0.50 X 1.0 Hz, and function to ⊓⊔ . Adjust the time symmetry at the 50Ω OUT connector to less than 0.2% using R47 on the VCG board. In addition to using sweep magnifier on scope for this calibration, a dual channel counter may be used as described in Step 5 of Section 4.4.4.

18. Set frequency to 9.99 X 1.0 Hz. Adjust output frequency to 9.99 Hz ±0.01 Hz (or period to 100.1 ms ±0.1 ms) using R15 on the VCG board.

4.4.5 X-Y Multiplier Adjustment

1. Set function to DC, frequency to 2.00 X 100 Hz, and DC/OFFSET to 0 0.00.

2. Make sure the 50Ω output ground is not shorted to program ground by measuring the voltage between the two grounds; i.e., the grounds of 50Ω OUT and TRIG IN.

3. Connect the 50Ω OUT to an oscilloscope. Alternately short and open the 50Ω ground to the TRIG IN ground. Adjust R153 on the main board at the same time until the dc level at the output changes less than 5 mV.

NOTE

In case the voltage across the two grounds is too small and the effect is not obvious, an external voltage less than 10 Vdc can be applied momentarily between the two grounds for the above calibration. R153 should be adjusted for a dc shift of less than 5 mV.

4. Adjust R117 on the main board so that the output dc level stays within 10 mV at the 0.00 and 9.00 settings of the P-P AMPLITUDE VOLTS control.

5. Set DC/OFFSET to 0 Vdc ±20 mV using R132 on the main board.

6. Set function to ∿ (frequency remains at 2.00 X 100 Hz) and P-P AMPLITUDE to 0.00.

7. Adjust the voltage between TP3 and TP1 (GND) on main board to 0 Vdc ±5 mV using R8 on the D/A amplifier board. TP3 is located at one end of R110 in the X-Y multiplier section on the main board.

8. Adjust the 50Ω OUT signal to minimum using R118 on the main board.

9. Set P-P AMPLITUDE to 0.05 V. Adjust R124 on main board for the most linear waveform.

10. Reset P-P AMPLITUDE to 0.00. Repeat Step 8.

11. Set function to DC with P-P AMPLITUDE and DC/OFFSET still at 0.00. Adjust dc voltage at 50Ω OUT to 0 Vdc ±20 mV into open circuit using R132 on the main board.

12. Set function to ∿ and P-P AMPLITUDE to 0.00. Repeat Step 8.

4.4.6 Sine Distortion Adjustment

1. Set function to ∿ , frequency to 9.99 X 100 Hz, and P-P AMPLITUDE to 9.99.

2. Connect a scope probe (X1) to the output of the sine amplifier at TP4 and ground at TP1. Connect the other end to a low frequency sine distortion analyzer.

3. Adjust sine distortion for minimum using R85, R86 and R88 on the main board. These pots interact so several adjustments of each pot may be necessary for minimum distortion.

4. Adjust for minimum sine distortion at 50Ω OUT using R120 on the main board.

5. Check sine distortion at 9.99 X 1 kHz. Re-adjust R85, R86 and R88, if necessary, to obtain optimum sine distortion at 999 Hz and 9.99 kHz.

6. Set function to DC, frequency to 2.00 X 100 Hz and DC/OFFSET to 0 0.00. Repeat Steps 4 and 11 in Section 4.4.5 (X-Y Multiplier Adjustment).

4.4.7 Output Amplitude and DC Offset Adjustment

1. Set function to DC and P-P AMPLITUDE to 0.00. Adjust R18 on the D/A amplifier board so that the dc level at the 50Ω OUT connector changes less than 10 mV at different dc polarity settings: "−", "0" and "+".

2. Set P-P AMPLITUDE to 9.99 V, function to ∿ and frequency to 9.99 X 100 Hz.

3. Adjust output amplitude to 9.99 V p-p ±10 mV into a precision 50Ω load using R10 on the D/A amplifier board.

4. Set function to ∿ . Adjust the amplitude to 9.99 V p-p ±10 mV using R108 on the main board.

5. Adjust the dc offset of ∿ output to less than ±10 mV using R93 on the main board.

6. Set function to ⊓ . Adjust the peak voltage to ±4.995 V ±5 mV using R57 and R54 on the main board for positive and negative peaks, respectively.

NOTE

If calibration cannot be achieved, trim R44 (on main board) so that the ⊓ signal at the emitter of Q13 is symmetrical about ground within 200 mV.

7. Set function to DC and DC/OFFSET VOLTS to +9.99. Adjust the output voltage at 50Ω OUT connector to +9.99 V ±10 mV using R22 on the D/A amplifier board without a load.

8. Switch DC/OFFSET VOLTS to −9.99. The output voltage should be −9.99 V ±60 mV. If not, re-adjust R22 to obtain optimum calibration.

9. Set function to ∿ , P-P AMPLITUDE to 0.00 and DC/OFFSET VOLTS to +4.99.

10. Adjust the dc offset at the 50Ω OUT connector to +4.99 V ±5 mV into a precision 50Ω load using R24 on the D/A amplifier board.

11. Switch the DC/OFFSET VOLTS to −4.99. The output voltage should be −4.99 V ±30 mV. If not, re-adjust R24 to obtain optimum calibration.

4.4.8 High Frequency Amplitude Response Adjustment

1. Set frequency to 1.00 X 1 MHz, DC/OFFSET to 0 0.00, P-P AMPLITUDE to 9.99 V, and function to ⊓ . Make sure that the output is loaded with a precision 50Ω load.

2. Adjust C75 and C77 on the main board for best looking square waveform.

3. Set function to ∿ . Adjust for best amplitude flatness to 10 MHz with 1 kHz as reference using C49 on the main board.

4.4.9 Trigger Baseline Adjustment

1. Set function to ∿ , frequency to 9.99 X 100 Hz, DC/OFFSET to 0 0.00, and P-P AMPLITUDE to 9.99 V. Generator should be in TRIG mode. Adjust output voltage to 0 Vdc ±10 mV using R2 on the main board.

2. Change frequency to 0.01 X 100 Hz. Adjust output voltage to 0 Vdc ±30 mV using R34 on the VCG board.

3. Change function to ∿ . Adjust output voltage to 0 Vdc ±10 mV using R93 on the main board.

4.5 CORRECTIVE MAINTENANCE

This portion of the manual presents a systematic approach to trouble-shooting. It is composed of two parts. Part one (see 4.5.1) is a quick guide for locating the area of the problem. Part two (see 4.5.2) contains 12 tables which are given as detailed supplements to part one.

The following abbreviations are used:

Symbol	Meaning
B	Base (transistor)
C	Collector (transistor)
E	Emitter (transistor)
G	Gate (FET)
S	Source (FET)
D	Drain (FET)
CR	Diode
Qn	Transistor number (n)
V_{GS}	Voltage between gate and source (FET)
Q	Output terminal (flip-flop)
$\overline{Q}$	Inverting output terminal (flip-flop)

4.5.1 Quick Trouble-Shooting Guide

Symptom	Corrective Action
Blown Line Fuse	Replace fuse. If it blows again, check the following: 1. Solder bridge or wire connection shorted. 2. Q45 and/or Q46 shorted in output amplifier. 3. One of the 7 transistors mounted on the rear panel is shorted to itself or to another transistor through the chassis. 4. Follow Table 4-2 to locate the short in a particular supply. 5. By-pass capacitors for power supply are shorted. 6. Relay in –24 V supply is shorted.
+15 V Power Supply Malfunctions	1. Voltage low: a. Transformer output low. b. Extra current loading. Check for overheated and defective component in the circuit. c. Q2 or Q3 is shorted. d. Q1 is open. e. CR2 is shorted. f. IC1 is defective. 2. Voltage high: a. Power transistor TIP29 or Q1 is shorted. b. Q3 is open. c. IC1 is defective. 3. High frequency oscillation (MHz): a. C4 or C5 at IC1 is defective. b. One of the semiconductors in another part of the circuit is oscillating. Locate by using hand to touch the most sensitive area of the circuit boards. 4. Large 60 cycle noise: a. Dirty contact. Unplug the power board and clean the contact. b. Defective filter capacitor, C1 or C9.
Other Power Supply Malfunctions	1. Follow Table 4-2 to locate the problem to a particular power supply. 2. Use similar procedure for trouble-shooting as in the +15 V power supply malfunctions.
No Output Signals	1. If no ∿ signal is present at output of ∿ AMPL, follow Table 4-3 for trouble-shooting. 2. If no signal is present at pin 4 of IC2 in the X-Y multiplier on main board, follow Table 4-7 to check out relay logic. 3. If no signal is present at both emitters of Q31 and Q32 with the ∿ function selected, follow Table 4-12 to check out the X-Y multiplier. 4. If signal is seen at emitter of Q31 and Q32, follow Table 4-5 to check out the output amplifier.
No ∿ , ⊓ or SYNC Output	Follow Table 4-12 to check out the corresponding circuit.
⊓ Rise/Fall Time Abnormally Slow	1. Malfunctioning ⊓ amplifier. 2. One of the capacitors in the output amplifier is open. 3. C75 and C77 (output amplifier) are not calibrated. 4. C50, C53 or C52 in X-Y multiplier is open.

Quick Trouble-Shooting Guide (continued)

Symptom	Corrective Action
Frequency Accuracy Out of Specification	1. Check frequency calibration. 2. Check for defective C10, C16 to C23, CR18 and/or CR20 on main board, if problem is in X10K to X1 MHz ranges. 3. Check capacitance multiplier, if problem appears in X0.001 to X1 ranges only, using Table 4-6. 4. Check digit switch, D/A converter of frequency section, if problem appears to be in frequency setting, using Table 4-9. 5. Check VCG and D/A amplifier for frequency linearity problem in all ranges, using Table 4-4. 6. Follow Table 4-10 for frequency ranging problem.
High Frequency Output Has Abnormal Ringing	1. C69 or output amplifier is open. 2. Defective capacitor in output amplifier.
High Sine Distortion at Low Frequency	1. ∿ amplitude and time symmetry calibration is off. 2. Defective sine converter. 3. Sine converter or X-Y multiplier calibration is off. 4. Dirty contact on power supply board.
High Sine Distortion at High Frequency	1. ⊓ also looks bad, if problem is in the output amplifier. 2. Defective capacitors C10 and C16 to C23 in ∿ amplifier. 3. Defective C29 to C36 in sine amplifier. 4. Defective sine converter.
Unsymmetrical ∿	Follow Table 4-4 to check out the VCG circuit.
Amplitude Accuracy Out of Specification	1. Check calibration. 2. Check for defective C25, C31 and C67 for frequency linearity problem over 1 kHz. 3. Check digit switch and D/A converter for amplitude setting problem, using Table 4-9. 4. Follow Table 4-8 for amplitude ranging problem. 5. Check X-Y multiplier, using Table 4-12.
DC Offset Accuracy Out of Specification	1. Check calibration. 2. Check digit switch and D/A converter for offset setting problem, using Table 4-9. 3. Check for zero offset of X-Y multiplier and output amplifier.
TRIG and GATED Mode Inoperative	1. Check trigger and gated control switches. 2. Check for correct signals in the trigger circuit, using Table 4-11.

4.5.2 Trouble-Shooting Guide Tables

4.5.2.1 POWER SUPPLIES

Use Table 4-2 to localize the problem to a particular power supply and associated loading circuitry. In some cases, it is necessary to turn on the power of the unit no more than one or two seconds at a time to prevent it from blowing fuses and further damage circuit components.

NOTE

Be sure to use the correct ground in the following voltage checks.

Table 4-2. POWER SUPPLIES

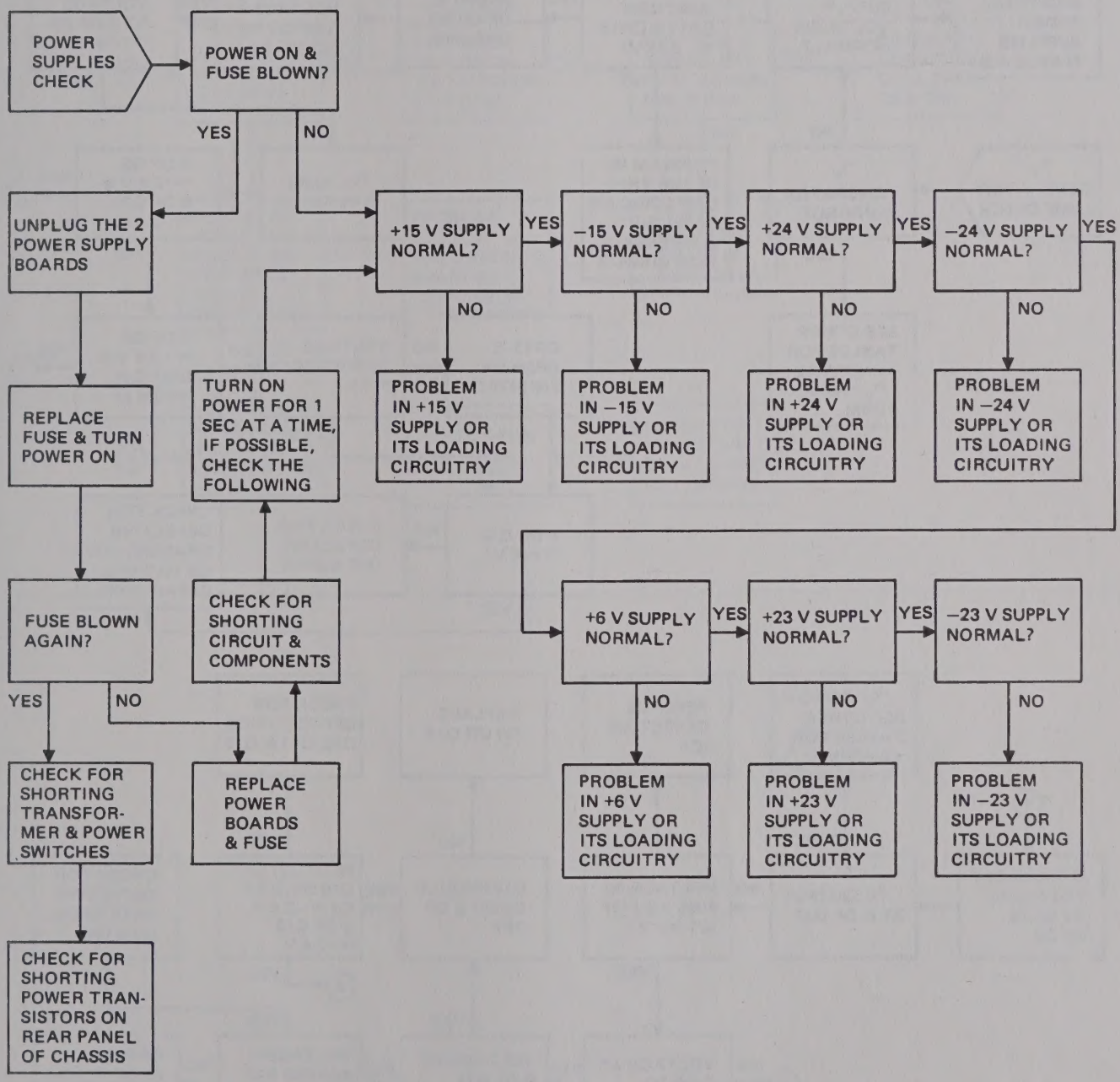
POWER SUPPLIES CHECK
POWER ON & FUSE BLOWN?
YES
NO
UNPLUG THE 2 POWER SUPPLY BOARDS
REPLACE FUSE & TURN POWER ON
FUSE BLOWN AGAIN?
YES
NO
CHECK FOR SHORTING TRANSFORMER & POWER SWITCHES
CHECK FOR SHORTING POWER TRANSISTORS ON REAR PANEL OF CHASSIS
REPLACE POWER BOARDS & FUSE
CHECK FOR SHORTING CIRCUIT & COMPONENTS
TURN ON POWER FOR 1 SEC AT A TIME, IF POSSIBLE, CHECK THE FOLLOWING
+15 V SUPPLY NORMAL?
YES
NO
PROBLEM IN +15 V SUPPLY OR ITS LOADING CIRCUITRY
−15 V SUPPLY NORMAL?
YES
NO
PROBLEM IN −15 V SUPPLY OR ITS LOADING CIRCUITRY
+24 V SUPPLY NORMAL?
YES
NO
PROBLEM IN +24 V SUPPLY OR ITS LOADING CIRCUITRY
−24 V SUPPLY NORMAL?
YES
NO
PROBLEM IN −24 V SUPPLY OR ITS LOADING CIRCUITRY
+6 V SUPPLY NORMAL?
YES
NO
PROBLEM IN +6 V SUPPLY OR ITS LOADING CIRCUITRY
+23 V SUPPLY NORMAL?
YES
NO
PROBLEM IN +23 V SUPPLY OR ITS LOADING CIRCUITRY
−23 V SUPPLY NORMAL?
NO
PROBLEM IN −23 V SUPPLY OR ITS LOADING CIRCUITRY

Table 4-3. TRIANGLE AMPLIFIER, COMPARATOR, AND HYSTERESIS SWITCH

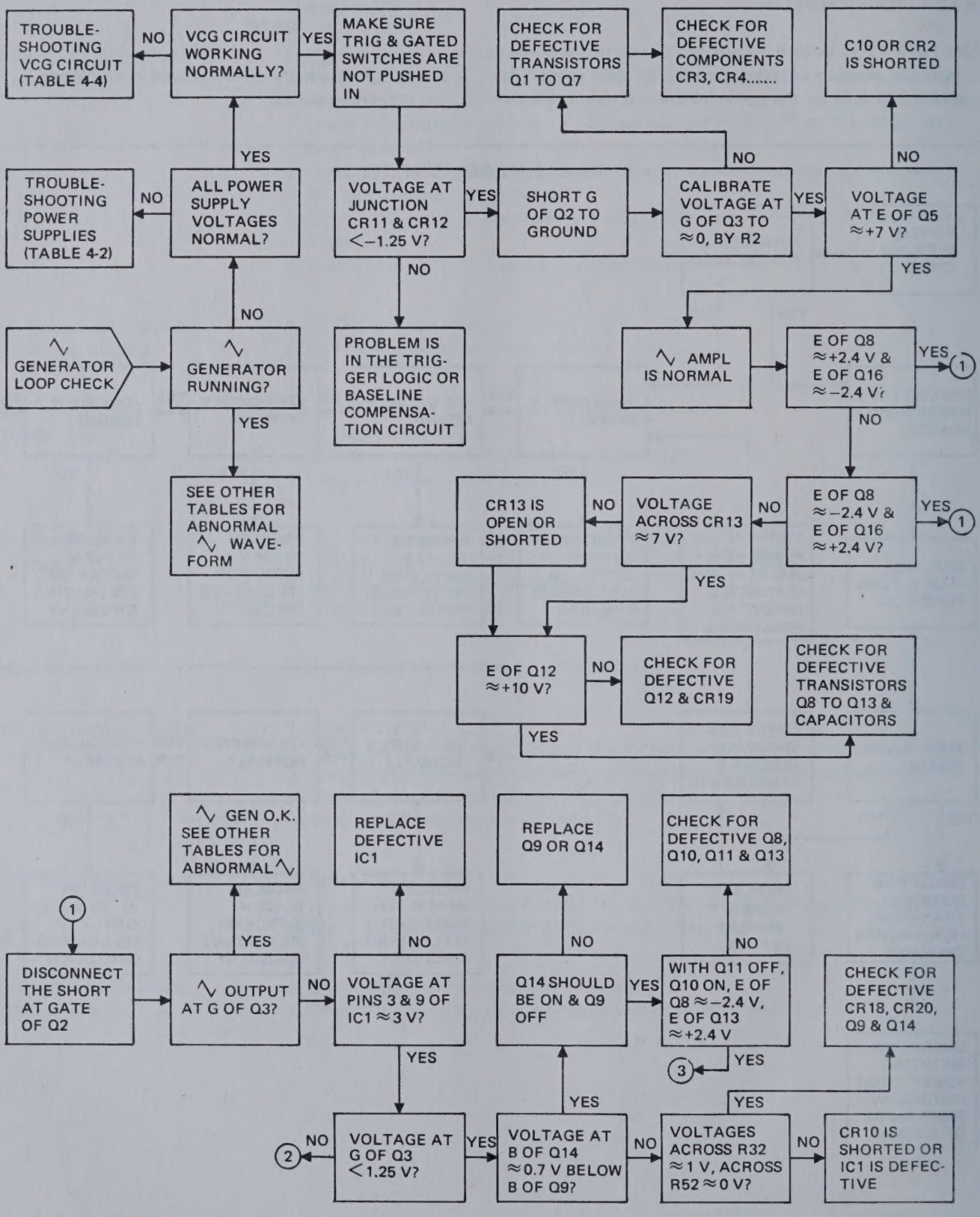

Table 4-3. TRIANGLE AMPLIFIER, COMPARATOR, AND HYSTERESIS SWITCH (Continued)

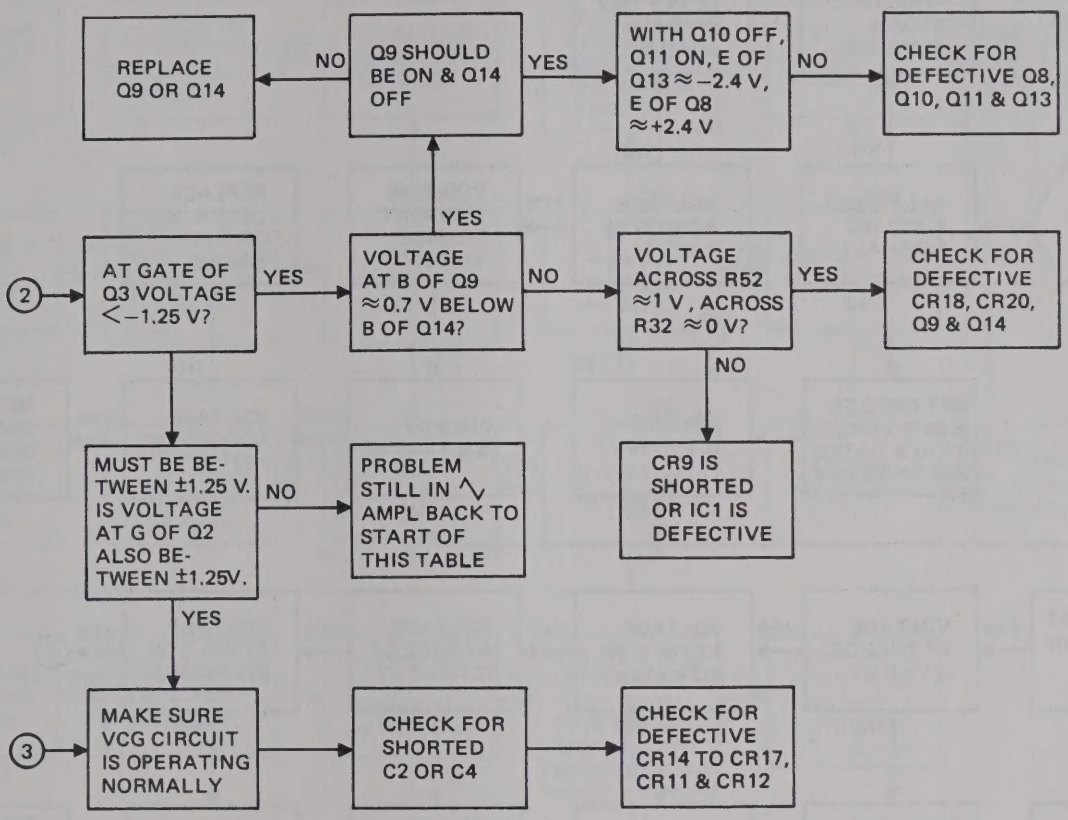
REPLACE Q9 OR Q14
NO
Q9 SHOULD BE ON & Q14 OFF
YES
WITH Q10 OFF, Q11 ON, E OF Q13 ≈ −2.4 V, E OF Q8 ≈ +2.4 V
NO
CHECK FOR DEFECTIVE Q8, Q10, Q11 & Q13
YES
2
AT GATE OF Q3 VOLTAGE < −1.25 V?
YES
VOLTAGE AT B OF Q9 ≈ 0.7 V BELOW B OF Q14?
NO
VOLTAGE ACROSS R52 ≈ 1 V, ACROSS R32 ≈ 0 V?
YES
CHECK FOR DEFECTIVE CR18, CR20, Q9 & Q14
NO
MUST BE BETWEEN ±1.25 V. IS VOLTAGE AT G OF Q2 ALSO BETWEEN ±1.25V.
NO
PROBLEM STILL IN AMPL BACK TO START OF THIS TABLE
CR9 IS SHORTED OR IC1 IS DEFECTIVE
YES
3
MAKE SURE VCG CIRCUIT IS OPERATING NORMALLY
CHECK FOR SHORTED C2 OR C4
CHECK FOR DEFECTIVE CR14 TO CR17, CR11 & CR12

Table 4-4. VCG AND CURRENT SOURCE

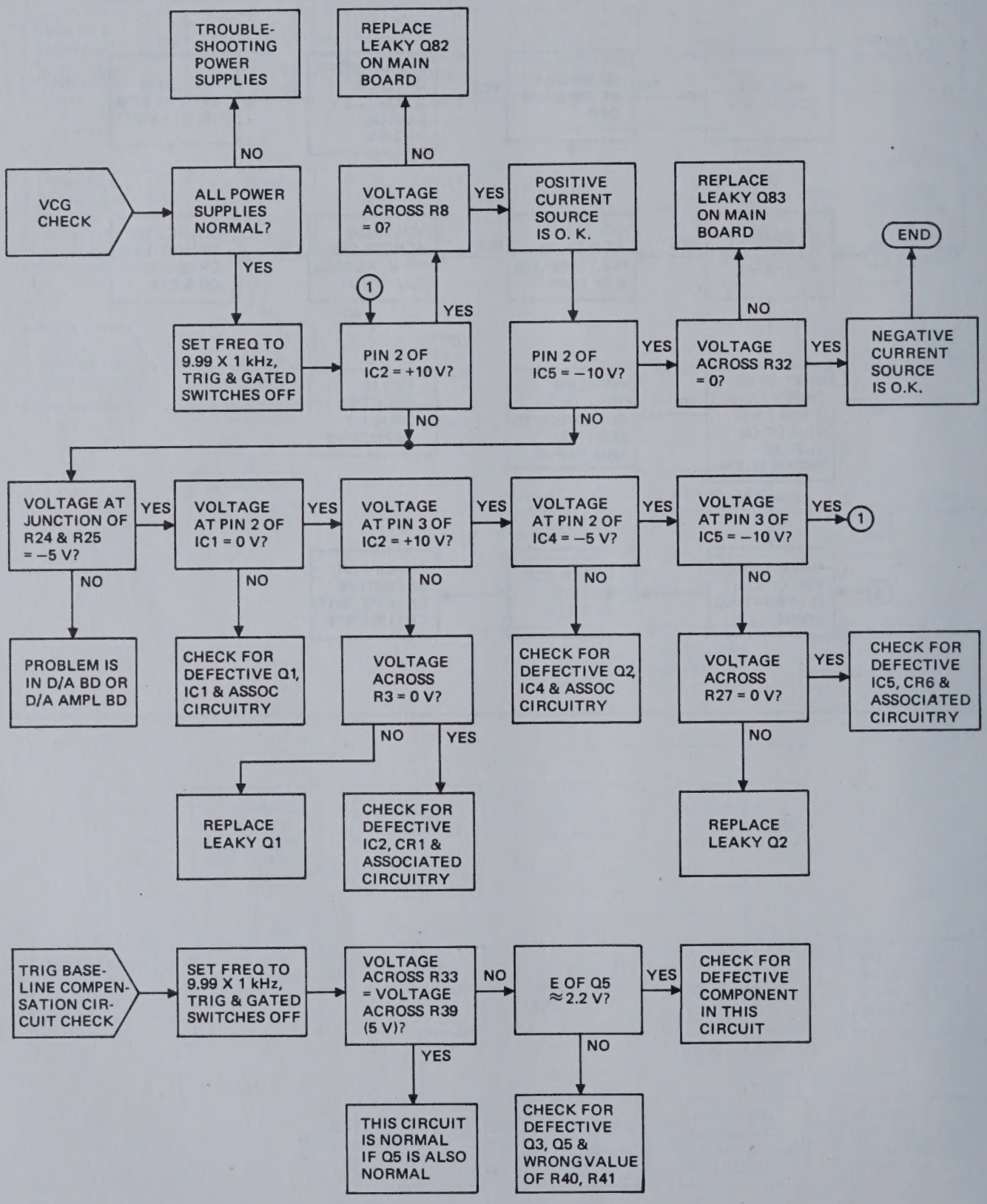
VCG CHECK
ALL POWER SUPPLIES NORMAL?
NO
TROUBLE-SHOOTING POWER SUPPLIES
YES
SET FREQ TO 9.99 X 1 kHz, TRIG & GATED SWITCHES OFF
VOLTAGE ACROSS R8 = 0?
NO
REPLACE LEAKY Q82 ON MAIN BOARD
YES
1
PIN 2 OF IC2 = +10 V?
NO
YES
POSITIVE CURRENT SOURCE IS O. K.
PIN 2 OF IC5 = −10 V?
NO
YES
REPLACE LEAKY Q83 ON MAIN BOARD
VOLTAGE ACROSS R32 = 0?
NO
YES
NEGATIVE CURRENT SOURCE IS O.K.
END
VOLTAGE AT JUNCTION OF R24 & R25 = −5 V?
NO
PROBLEM IS IN D/A BD OR D/A AMPL BD
YES
VOLTAGE AT PIN 2 OF IC1 = 0 V?
NO
CHECK FOR DEFECTIVE Q1, IC1 & ASSOC CIRCUITRY
YES
VOLTAGE AT PIN 3 OF IC2 = +10 V?
NO
VOLTAGE ACROSS R3 = 0 V?
NO
REPLACE LEAKY Q1
YES
CHECK FOR DEFECTIVE IC2, CR1 & ASSOCIATED CIRCUITRY
YES
VOLTAGE AT PIN 2 OF IC4 = −5 V?
NO
CHECK FOR DEFECTIVE Q2, IC4 & ASSOC CIRCUITRY
YES
VOLTAGE AT PIN 3 OF IC5 = −10 V?
NO
VOLTAGE ACROSS R27 = 0 V?
NO
REPLACE LEAKY Q2
YES
CHECK FOR DEFECTIVE IC5, CR6 & ASSOCIATED CIRCUITRY
YES
1
TRIG BASE-LINE COMPEN-SATION CIR-CUIT CHECK
SET FREQ TO 9.99 X 1 kHz, TRIG & GATED SWITCHES OFF
VOLTAGE ACROSS R33 = VOLTAGE ACROSS R39 (5 V)?
NO
YES
THIS CIRCUIT IS NORMAL IF Q5 IS ALSO NORMAL
E OF Q5 ≈2.2 V?
NO
CHECK FOR DEFECTIVE Q3, Q5 & WRONG VALUE OF R40, R41
YES
CHECK FOR DEFECTIVE COMPONENT IN THIS CIRCUIT

Table 4-5. OUTPUT AMPLIFIER

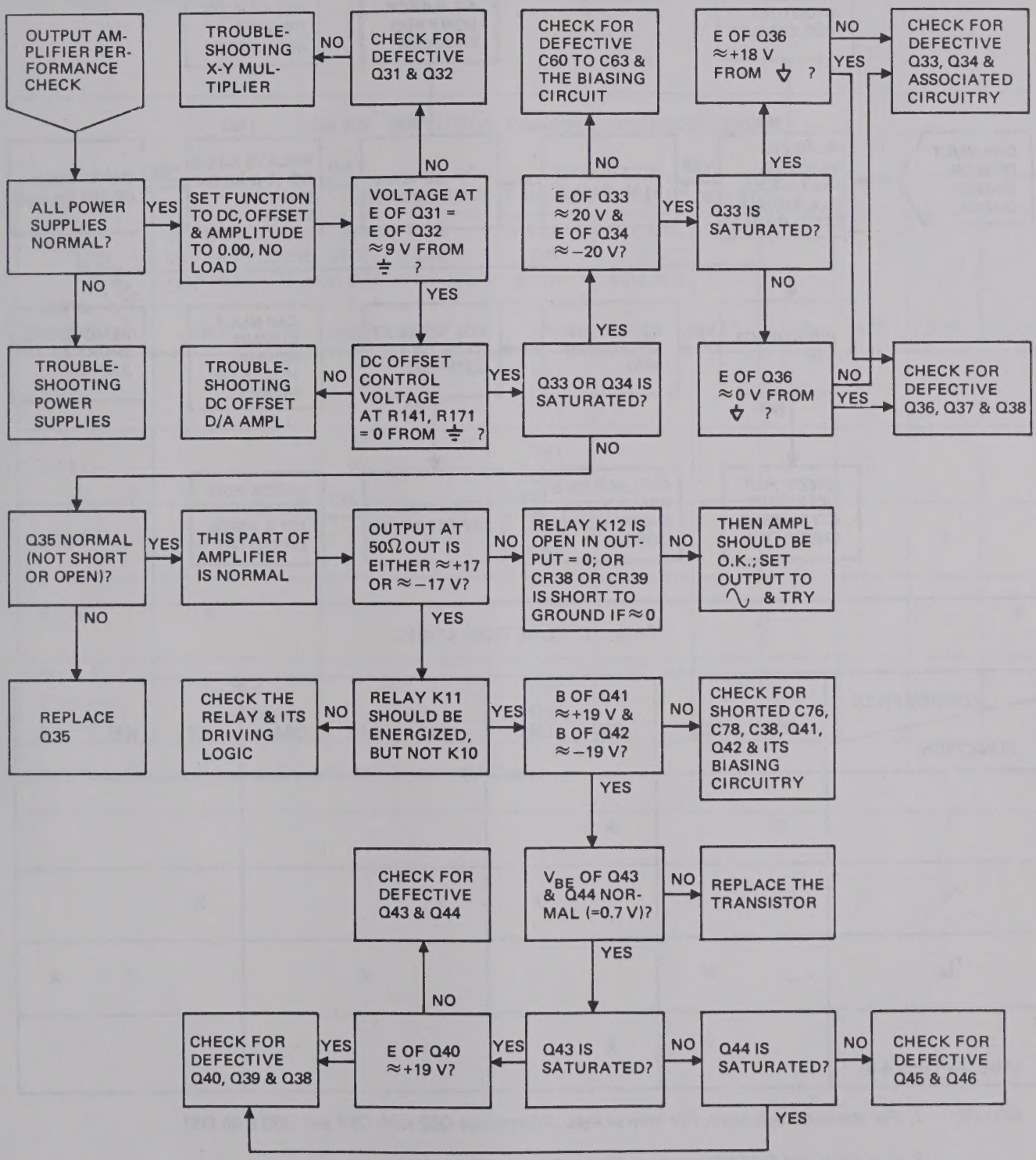
OUTPUT AMPLIFIER PERFORMANCE CHECK
ALL POWER SUPPLIES NORMAL?
YES
NO
TROUBLESHOOTING POWER SUPPLIES
SET FUNCTION TO DC, OFFSET & AMPLITUDE TO 0.00, NO LOAD
VOLTAGE AT E OF Q31 = E OF Q32 ≈9 V FROM ⏚ ?
NO
CHECK FOR DEFECTIVE Q31 & Q32
YES
TROUBLESHOOTING X-Y MULTIPLIER
NO
DC OFFSET CONTROL VOLTAGE AT R141, R171 = 0 FROM ⏚ ?
YES
TROUBLESHOOTING DC OFFSET D/A AMPL
NO
Q33 OR Q34 IS SATURATED?
YES
NO
CHECK FOR DEFECTIVE C60 TO C63 & THE BIASING CIRCUIT
E OF Q33 ≈20 V & E OF Q34 ≈−20 V?
YES
NO
Q33 IS SATURATED?
YES
NO
E OF Q36 ≈+18 V FROM ⏚ ?
NO
YES
CHECK FOR DEFECTIVE Q33, Q34 & ASSOCIATED CIRCUITRY
E OF Q36 ≈0 V FROM ⏚ ?
NO
YES
CHECK FOR DEFECTIVE Q36, Q37 & Q38
Q35 NORMAL (NOT SHORT OR OPEN)?
YES
NO
REPLACE Q35
THIS PART OF AMPLIFIER IS NORMAL
OUTPUT AT 50Ω OUT IS EITHER ≈+17 OR ≈−17 V?
NO
YES
RELAY K12 IS OPEN IN OUTPUT = 0; OR CR38 OR CR39 IS SHORT TO GROUND IF ≈0
NO
THEN AMPL SHOULD BE O.K.; SET OUTPUT TO ∿ & TRY
CHECK THE RELAY & ITS DRIVING LOGIC
NO
RELAY K11 SHOULD BE ENERGIZED, BUT NOT K10
YES
B OF Q41 ≈+19 V & B OF Q42 ≈−19 V?
NO
YES
CHECK FOR SHORTED C76, C78, C38, Q41, Q42 & ITS BIASING CIRCUITRY
CHECK FOR DEFECTIVE Q43 & Q44
NO
V_{BE} OF Q43 & Q44 NORMAL (=0.7 V)?
NO
YES
REPLACE THE TRANSISTOR
CHECK FOR DEFECTIVE Q40, Q39 & Q38
YES
NO
E OF Q40 ≈+19 V?
YES
Q43 IS SATURATED?
NO
Q44 IS SATURATED?
NO
YES
CHECK FOR DEFECTIVE Q45 & Q46

Table 4-6. CAPACITANCE MULTIPLIER

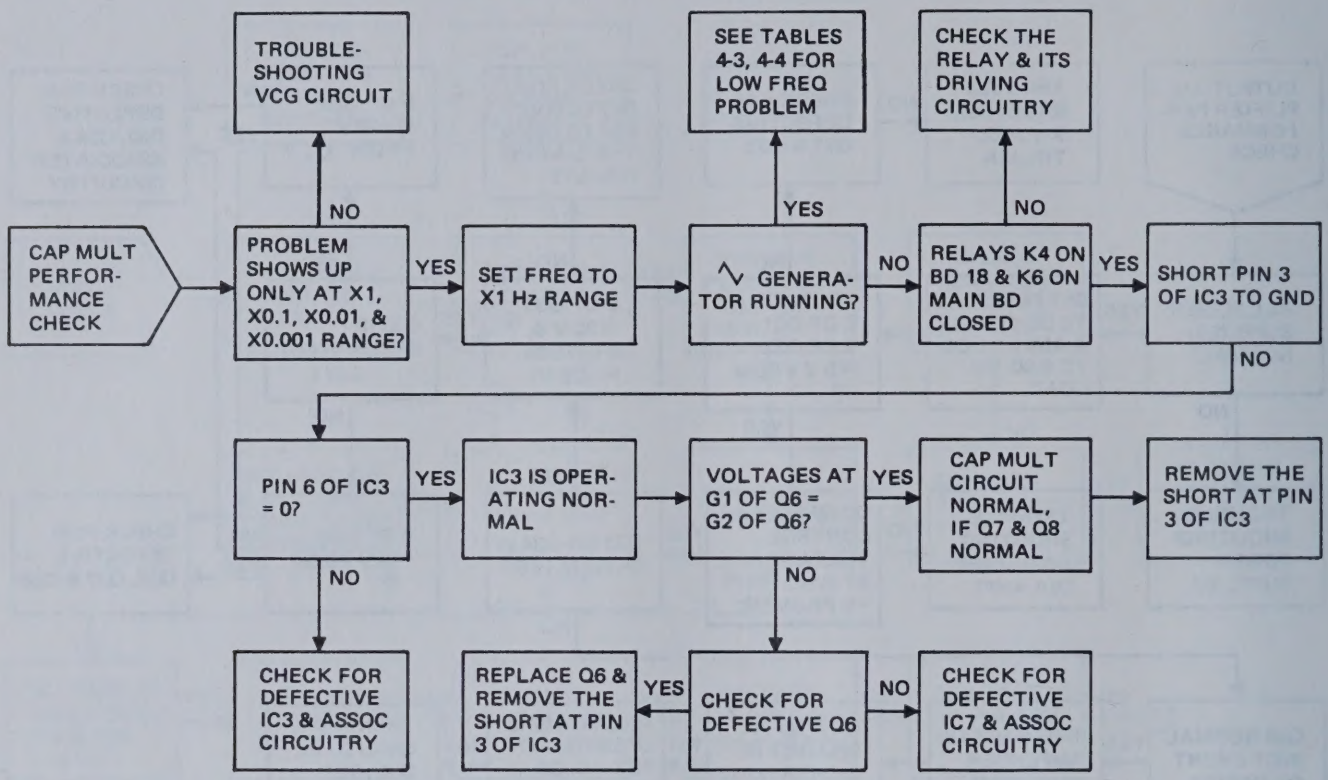
CAP MULT PERFOR-MANCE CHECK
PROBLEM SHOWS UP ONLY AT X1, X0.1, X0.01, & X0.001 RANGE?
NO
TROUBLE-SHOOTING VCG CIRCUIT
YES
SET FREQ TO X1 Hz RANGE
∿ GENERA-TOR RUNNING?
YES
SEE TABLES 4-3, 4-4 FOR LOW FREQ PROBLEM
NO
RELAYS K4 ON BD 18 & K6 ON MAIN BD CLOSED
NO
CHECK THE RELAY & ITS DRIVING CIRCUITRY
YES
SHORT PIN 3 OF IC3 TO GND
NO
PIN 6 OF IC3 = 0?
YES
IC3 IS OPER-ATING NOR-MAL
NO
CHECK FOR DEFECTIVE IC3 & ASSOC CIRCUITRY
VOLTAGES AT G1 OF Q6 = G2 OF Q6?
YES
CAP MULT CIRCUIT NORMAL, IF Q7 & Q8 NORMAL
REMOVE THE SHORT AT PIN 3 OF IC3
NO
CHECK FOR DEFECTIVE Q6
YES
REPLACE Q6 & REMOVE THE SHORT AT PIN 3 OF IC3
NO
CHECK FOR DEFECTIVE IC7 & ASSOC CIRCUITRY

Table 4-7. FUNCTION LOGIC

COMPONENTS / FUNCTION	Q58	Q59	Q60	Q61	Q62	Q63	Q64	K7	K8	K9
∿	X		X							
∿	X			X	X			X		
⊓		X		X		X			X	X
DC (Also see Table 4-8)		X	X				X			X

NOTES: 1. *For standard logic only. For inverse logic, interchange Q58 with Q59 and Q60 with Q61.*

2. *For TRIG and GATED logic, see Timing Diagram, Table 4-11.*

3. *The transistor or relay with "X" is in an "ON" state.*

4.5.2.2 AMPLITUDE RANGING CONTROL LOGIC

Table 4-8 is provided as a hint for trouble-shooting amplitude ranging control logic.

1. At X0.1 range, only Q48,Q49,Q51,Q56 and K13 are "ON" and all other transistors and relays should be "OFF".
2. Relay K12 should never be "ON" when K13, K14 or K15 is "ON".

Table 4-8. AMPLITUDE RANGING CONTROL LOGIC

COMPONENTS / AMPL RANGE	ALL COMPONENTS ARE ON MAIN CIRCUIT BOARD										
	STANDARD LOGIC ONLY, FOR INVERSE LOGIC, INTERCHANGE Q47 WITH Q48 AND Q49 WITH Q50				RELAY OR LOGIC DRIVER (ON)	(K1, D/A AMPL BOARD)					
	Q47	Q48	Q49	Q50		K10	K11	K12	K13	K14	K15
X1		X		X	Q54 Q55		X	X			
X0.1		X	X		Q51 Q56				X		
X0.01	X			X	Q52 Q56					X	
X0.001	X		X		Q53 Q56						X
DC output (Also see Table 4-7	Not Applicable		Not Applicable		Q57 Q55	X	X	X			

NOTE: The transistor or relay with "X" is in an "ON" state.

4.5.2.3 D/A CONVERTER

The D/A converter can easily be checked out by comparing the voltage level at the cathode of each switching diode according to Table 4-9. If the voltage level is not in agreement with the table, check for correct voltage at the connector and the associated circuitry.

Pin No. 1 at the connector is the summing node of the D/A amplifier and should be 0 Vdc. If not, the problem is in the D/A amplifier.

Table 4-9. D/A CONVERTER

COMPONENTS / FREQ AMPL OR OFFSET SETTINGS	PIN NUMBER AT CONNECTOR D/A CONVERTER BOARD												DIODE (CR) NUMBER (VOLTAGE AT CATHODE)											
	3	4	5	6	7	8	9	11	12	13	14	15	40	37	34	30	27	24	21	17	14	11	8	4
0.00	0	0	0	0	0	0	0	0	0	0	0	0	L	L	L	L	L	L	L	L	L	L	L	L
1.11	1	0	0	0	1	0	0	0	1	0	0	0	H	L	L	L	H	L	L	L	H	L	L	L
2.22	0	1	0	0	0	1	0	0	0	1	0	0	L	H	L	L	L	H	L	L	L	H	L	L
3.33	1	1	0	0	1	1	0	0	1	1	0	0	H	H	L	L	H	H	L	L	H	H	L	L
4.44	0	0	1	0	0	0	1	0	0	0	1	0	L	L	H	L	L	L	H	L	L	L	H	L
5.55	1	0	1	0	1	0	1	0	1	0	1	0	H	L	H	L	H	L	H	L	H	L	H	L
6.66	0	1	1	0	0	1	1	0	0	1	1	0	L	H	H	L	L	H	H	L	L	H	H	L
7.77	1	1	1	0	1	1	1	0	1	1	1	0	H	H	H	L	H	H	H	L	H	H	H	L
8.88	0	0	0	1	0	0	0	1	0	0	0	1	L	L	H	H	L	L	H	H	L	L	H	H
9.99	1	0	0	1	1	0	0	1	1	0	0	1	H	L	H	H	H	L	H	H	H	L	H	H

NOTE: H = +6 V.
L = 0 V.
1 is > 2.4 V for standard logic, < 1 V for inverting logic.
0 is < 1 V for standard logic, > 2.4 V for inverting logic.

4.5.2.4 FREQUENCY RANGING LOGIC

Table 4-10 is provided as a hint for trouble-shooting frequency ranging and calibration problems. A few typical examples are listed below to clarify the use of this table.

1. Defective Q16, C12, K3, R39 or K6 will cause abnormal frequency output at X1K range. Shorted C3 will have 0 Vdc output. Inoperative K4 will have frequency output as at X1 MHz range, etc.
2. Frequency stays the same at all ranges from X0.001 to X10 Hz, if relay K6 is not energized or is open.
3. Frequency out of specification at X10K, X0.1M and X1M ranges indicates that R40 is not properly calibrated.
4. Each pair of transistors, Q1 and Q2, Q3 and Q4, Q5 and Q6, and Q7 and Q8, should never be "ON" or "OFF" simultaneously. If this occurs, all frequency ranging is wrong, or there is no ranging control at all.

Table 4-10. FREQUENCY RANGING LOGIC

COMPONENTS / FREQ RANGING	TRANSISTORS ON FREQ RANGING BOARD (See Note 1)				MAIN BD						VCG BD				D/A AMPL BD			
					RELAY OR LOGIC DRIVER (ON)	C6 C7 C8	C11	C12	C13	C14 C15	CAP MULT	R18 R19	R20 R21	R22 R23	R16 R17	R37	R38	R39	R40
	Q1 Q2	Q3 Q4	Q5 Q6	Q7 Q8		K1	K2	K3	K4	K5	K6	K1	K2	K3	K4	K4	K5	K6	K7
X0.001	X	X	X	X	Q9, Q21 Q13, Q14					X	X	X				X			
X0.01		X	X	X	X	Q10, Q21 Q13, Q14					X	X		X			X			
X0.1	X		X	X	X	Q11, Q21 Q13, Q14					X	X			X		X			
X1		X		X	X	X	Q12, Q21 Q13, Q14					X	X				X	X		
X10	X		X		X	X	Q14					X				X			
X100		X	X		X	X	Q15				X						X		
X1K	X		X		X	X	Q16			X								X	
X10K		X		X		X	X	Q17, Q18 Q20		X										X
X0.1M	X		X		X		X	Q18, Q19 Q20	X											X
X1M		X		X		X	X	Q18, Q20												X

NOTES: 1. For standard control logic only (for inverse logic, interchange each pair of transistors).
2. The transistor or relay with "X" is in its "ON" state.

4.5.2.5 TRIGGER AND GATED LOGIC TIMING

For trouble-shooting the trigger, set the generator at GATED mode. Refer to Table 4-11. Draw a vertical line on the timing diagram along t_1 or t_2, depending on whether the TRIG IN signal is low or high, and check for correct voltage levels according to the timing diagram.

After the GATED mode has been checked out and is working normally, the TRIG mode can be checked in the same way but concentrated in the Q78, Q77 area.

Table 4-11. TRIGGER AND GATED LOGIC TIMING DIAGRAM

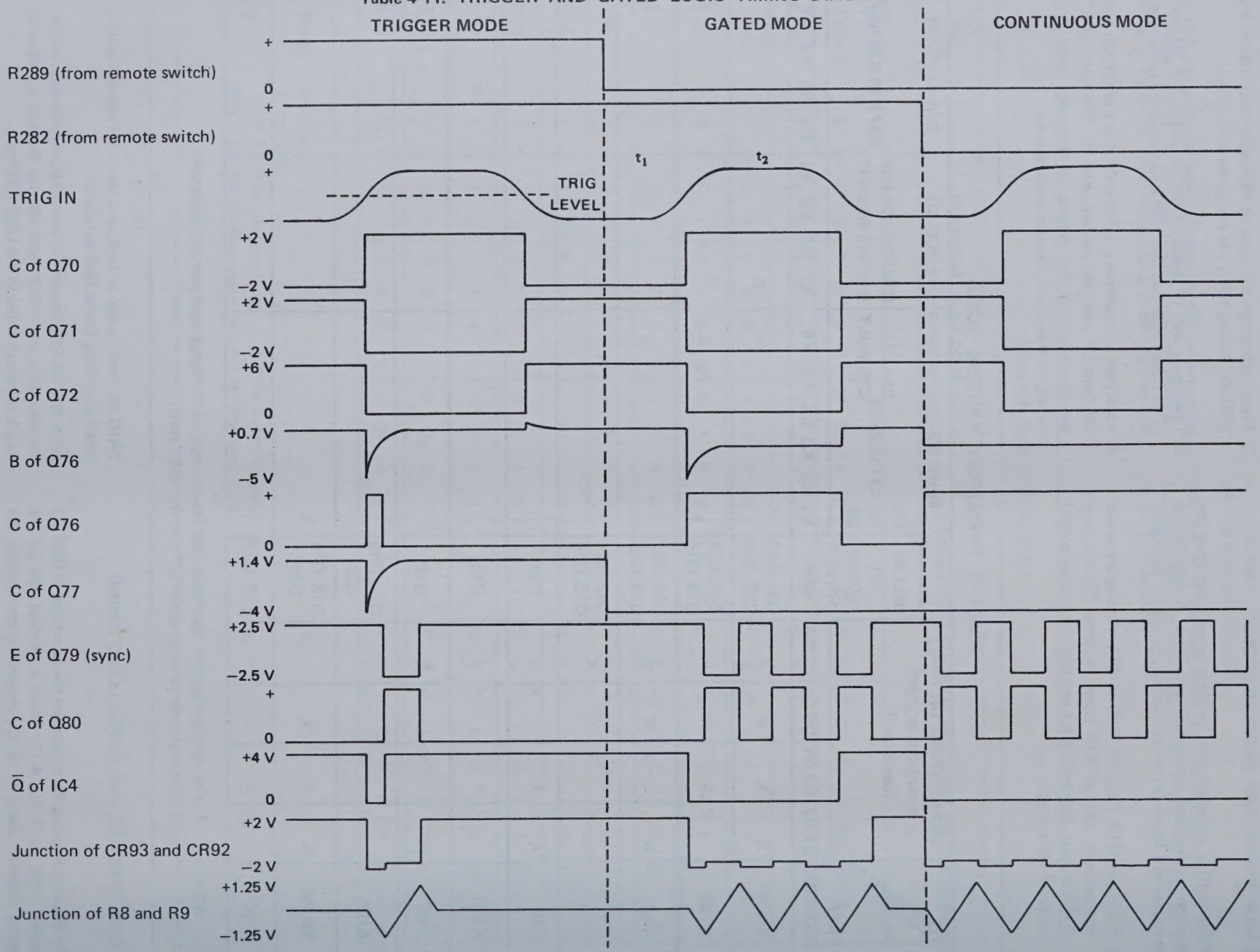

Table 4-12. KEY SIGNAL AND VOLTAGE

∿ AMPLIFIER, COMPARATOR AND HYSTERESIS SWITCH

Test Point	Typical Voltage
G of Q2	2.5 V p-p ∿ , 0 Vdc offset
G of Q3	2.5 V p-p ∿ , 0 Vdc offset
E of Q5	2.5 V p-p ∿ , ≈ +7 Vdc offset
Pins 1 and 4 of IC1	See Table 4-13
Pins 2 and 8	−3 V
Pins 3 and 9	−3.7 V
E of Q14	+6.8 Vdc
B of Q14 and Q9	See Table 4-13
E of Q8 and Q13	See Table 4-13
E of Q12	+10 V
R42 and R45 junction	−3 V
S of Q82	+10 V to +15 V, dependent on frequency setting
S of Q83	−10 V to −15 V, dependent on frequency setting

∿ CONVERTER AND AMPLIFIER

Test Point	Typical Voltage
Pin 2 of A1	See Table 4-13
Pin 4 of A1	+14 V
Pin 1 of A1	−14 V
Pin 5 of A1	250 mV p-p ∿ , 0 Vdc offset
R75 and R76 junction	2.5 V p-p ∿ , 0 Vdc offset
B of Q17 and Q18	+8 V

SYNC AND SQUARE AMPLIFIER

Test Point	Typical Voltage
R84 and R56 junction	±2.4 V ⊓⊔
CR27 cathode	±1.25 V ⊓⊔
R95 and R96 junction	±1.25 V ⊓⊔

AUX AMPLIFIER

Test Point	Typical Voltage
E of Q26	0 to +6 V ⊓⊔
E of Q27	+3.5 V
C of Q29	0 to +6 V ⊓⊔ , < 5 ns RF time

X-Y MULTIPLIER

Test Point	Typical Voltage
R111	Selected signal (∿ , ∿ , ⊓⊔ or DC)
R110	VCA input, voltage dependent on amplitude setting
Pins 8 and 12 of IC2	0 Vdc
Pin 5 of IC2	Same signal as at pin 4, but −1.4 V offset
Pins 6 and 11 of IC2	−1.4 V
Pin 10 of IC2	−1.4 V below pin 9
Pins 3 and 13	−13.5 V
Pin 1 of IC2	+5 V
E of Q32	Selected signal output, +9 Vdc offset, amplitude dependent on setting
E of Q31	Inverted output of Q32

OUTPUT AMPLIFIER

Test Point	Typical Voltage
Voltage between ⏚ and ▽	−1 to +1 V (when floating)
E of Q33	+19 Vdc
E of Q34	−19 Vdc
R157 and R158 junction	+0.7 Vdc
E of Q35	Selected waveform, 0 to 1 V p-p
E of Q36	+10 V ±5 V
B of Q41	+19 Vdc
E of Q43	+19 Vdc
B of Q42	−19 Vdc
E of Q44	−19 Vdc
R166 and R168 junction	+0.7 Vdc
E of Q37 and Q39	+19 Vdc
E of Q40	+2 V to +18 V
R192 and R193 junction	Main output, ±15 V maximum

D/A AMPLIFIER

Pins 2 and 3 of all D/A amplifiers (IC1, IC2 and IC3) are 0 Vdc. Their output voltages are dependent on front panel and remote control settings. The gain of IC2 will decrease to ½ when dc output is selected and K1 is closed.

Table 4-12. KEY SIGNAL AND VOLTAGE (Continued)

VCG AMPLIFIER AND TRIGGER BASELINE COMPENSATION

Test Point	Typical Voltage
R24 and R25 junction	0 to −5 V*
S of Q1	0 V
Pins 2 and 3 of IC2	+15 to +10 V*
S of Q2	0 to −5 V*
Pins 2 and 3 of IC5	−15 to −10 V*
V_{GS} of Q3	$V_{G1,S1} = V_{G2,S2}$
R36 and R37	Voltage across both are equal
E of Q5	+2.2 V
R36	Voltage across R39 and R29 are equal

*Voltage is dependent on a frequency setting of 0.00 to 9.99.

CAPACITANCE MULTIPLIER*

Test Point	Typical Voltage
G1 and G2 of Q6	±1.25 V ∿
Pin 6 of IC7	⊓⊔, amplitude dependent on frequency setting
Pins 2 and 3 of IC3	±1.25 V ∿
Pin 6 of IC3	±7.50 V ∿

*The above information applies if the frequency range is at X1 Hz.

Table 4-13. KEY WAVEFORMS

Test Point	Waveforms
AUX OUT	
G of Q2 G of Q3	+1.25 V −1.25 V
Pin 1 of IC1	+0.7 V −0.5 V
Pin 4 of IC1	+0.5 V −0.7 V
B of Q14	+7 V +6.3 V
B of Q9	+7 V +6.3 V
E of Q8	+2.4 V −2.4 V
E of Q13	+2.4 V −2.4 V
CR16 Anode	+2 V −2 V
CR17 Cathode	+2 V −2 V
P2 of A1	+0.6 V −0.6 V
P5 of A1	+0.12 V −0.12 V
R75 and R76	+1.25 V −1.25 V

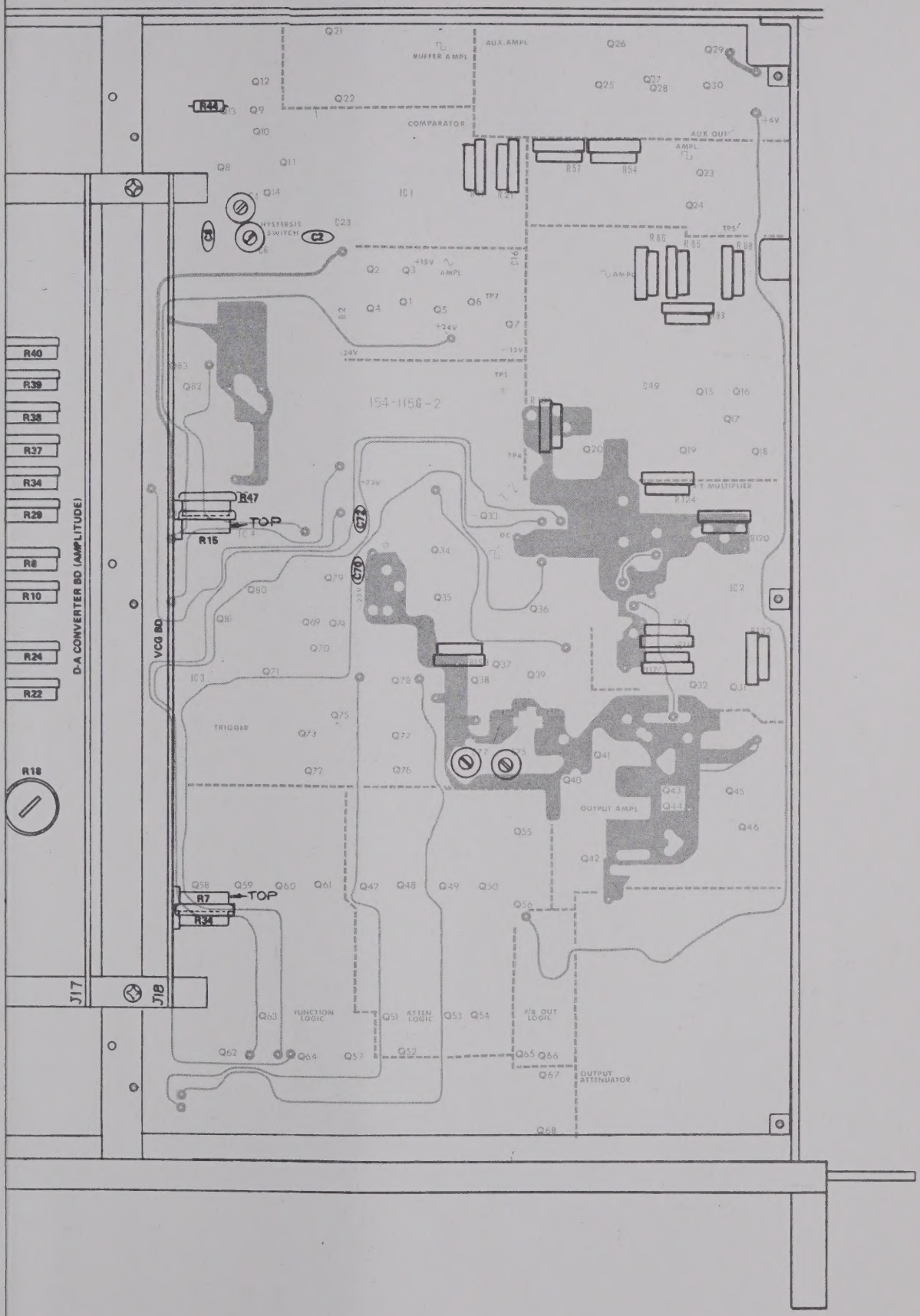

ADJUSTMENT AND TEST POINT LOCATIONS

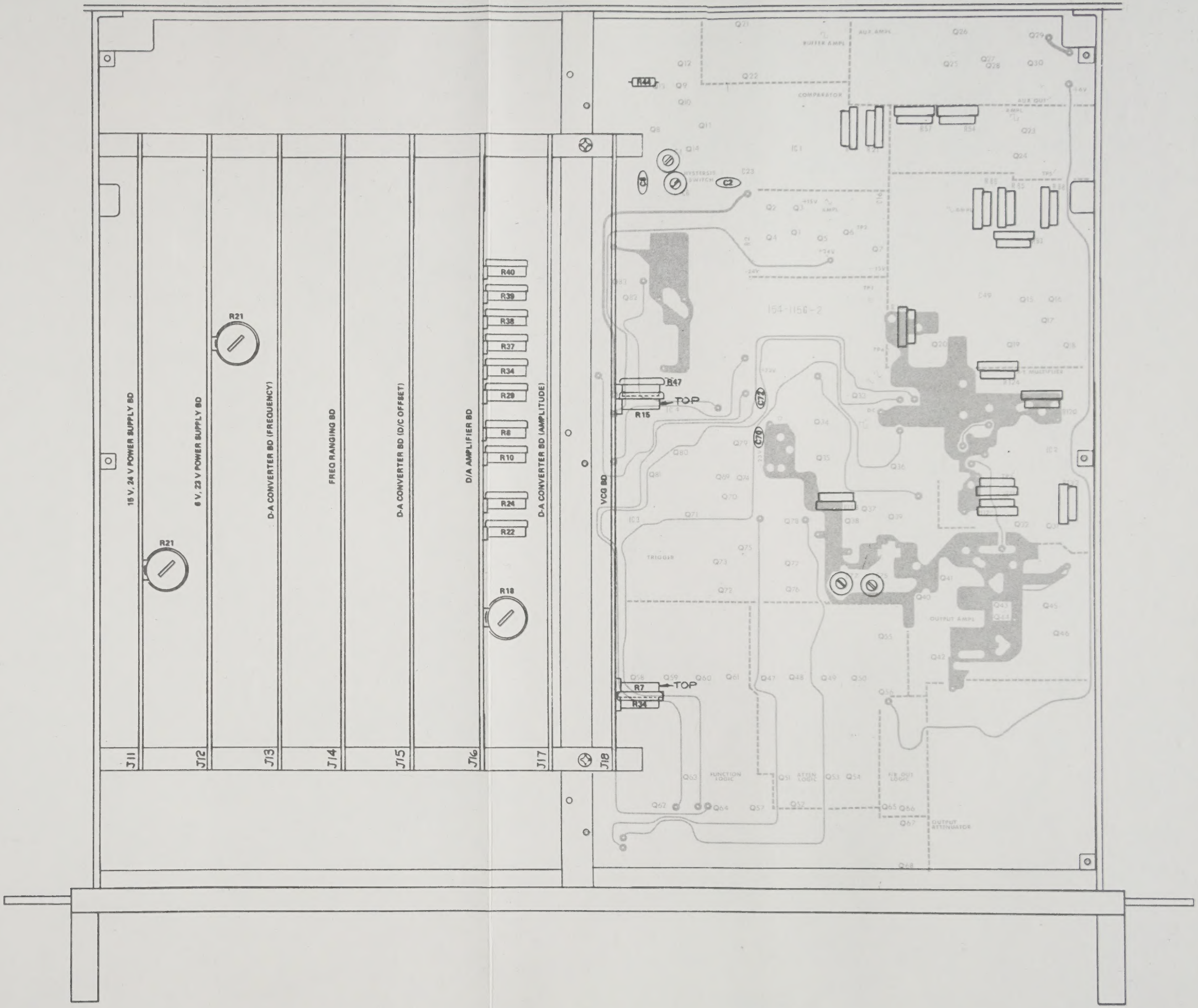

ADJUSTMENT AND TEST POINT LOCATIONS

SECTION 5

DIAGRAMS ADDENDA AND PARTS LISTS

5.1 DRAWINGS

The following assembly drawings (with parts lists) and schematics are in the arrangement shown below.

5.2 ORDERING PARTS

When ordering spare parts, please specify part number, circuit reference, board, serial number of unit and, if applicable, the function performed.

5.3 ADDENDA

Under Wavetek's product improvement program, the latest electronic designs and circuits are incorporated into each Wavetek instrument as quickly as development and testing permit. Because of the time needed to compose and print instruction manuals, it is not always possible to include the most recent changes in the initial printing. Whenever this occurs, addendum pages are prepared to summarize the changes made and are inserted immediately inside the rear cover. If no such pages exist, the manual is correct as printed.

CROSS REFERENCE FOR DRAWING NUMBERS

Drawings	Old Number	New Number
Chassis Schematic	154-200	0004-00-0041
Chassis Assy	154-000	0002-00-0300
Chassis Parts List	*	1101-00-0041
Main Board Schematic	154-215	0103-00-0085
Main Board Assy	154-015	0101-00-0085
Main Board Parts List	*	1100-00-0085
Mother Board Assy	154-010	0101-00-0080
Mother Board Parts List	*	1100-00-0080
15V, 24V Power Supply Schematic	154-211	0103-00-0081
15V, 24V Power Supply Assy	154-011	0101-00-0081
15V, 24V Power Supply Parts List	*	1100-00-0081
6V, 23V Power Supply Schematic	154-221	0103-00-0089
6V, 23V Power Supply Assy	154-021	0101-00-0089
6V, 23V Power Supply Parts List	*	1100-00-0089
D-A Converter Schematic	154-213	0103-00-0083
D-A Converter Assy	154-013	0101-00-0083
D-A Converter Parts List	*	1100-00-0083
Frequency Range Schematic	154-212	0103-00-0082
Frequency Range Assy	154-012	0101-00-0082
Frequency Range Parts List	*	1100-00-0082
D-A Amplifier Schematic	154-214	0103-00-0084
D-A Amplifier Assy	154-014	0101-00-0084
D-A Amplifier Parts List	*	1100-00-0084
VCG Board Schematic	154-216	0103-00-0086
VCG Board Assy	154-016	0101-00-0086
VCG Board Parts List	*	1100-00-0086
Transistor Mounting Board Assy	154-017	0101-00-0087
Transistor Mounting Board Parts List	*	1100-00-0087
Rear Panel Assy	154-001	0102-00-0331
Rear Panel Parts List	*	1101-00-0072
Extender Board Assy	154-018	0101-00-0088
Extender Board Parts List	*	1100-00-0088

*Same as assembly number

SECTION 5
DIAGRAMS ADDENDA AND PARTS LISTS

5.1 DRAWINGS

The following assembly drawings (with parts lists) and schematics are in the arrangement shown below.

5.2 ORDERING PARTS

When ordering spare parts, please specify part number, circuit reference, board, serial number of unit and, if applicable, the function performed.

5.3 ADDENDA

Under Wavetek's product improvement program, the latest electronic designs and circuits are incorporated into each Wavetek instrument as quickly as development and testing permit. Because of the time needed to compose and print instruction manuals, it is not always possible to include the most recent changes in the initial printing. Whenever this occurs, addendum pages are prepared to summarize the changes made and are inserted immediately inside the rear cover. If no such pages exist, the manual is correct as printed.

CROSS REFERENCE FOR DRAWING NUMBERS

Drawings	Old Number	New Number	Drawings	Old Number	New Number
Chassis Schematic	154-200	0004-00-0041	Frequency Range Schematic	154-212	0103-00-0082
Chassis Assy	154-000	0002-00-0300	Frequency Range Assy	154-012	0101-00-0082
Chassis Parts List	*	1101-00-0041	Frequency Range Parts List	*	1100-00-0082
Main Board Schematic	154-215	0103-00-0085	D-A Amplifier Schematic	154-214	0103-00-0084
Main Board Assy	154-015	0101-00-0085	D-A Amplifier Assy	154-014	0101-00-0084
Main Board Parts List	*	1100-00-0085	D-A Amplifier Parts List	*	1100-00-0084
Mother Board Assy	154-010	0101-00-0080	VCG Board Schematic	154-216	0103-00-0086
Mother Board Parts List	*	1100-00-0080	VCG Board Assy	154-016	0101-00-0086
			VCG Board Parts List	*	1100-00-0086
15V, 24V Power Supply Schematic	154-211	0103-00-0081			
			Transistor Mounting Board Assy	154-017	0101-00-0087
15V, 24V Power Supply Assy	154-011	0101-00-0081			
15V, 24V Power Supply Parts List	*	1100-00-0081	Transistor Mounting Board Parts List	*	1100-00-0087
6V, 23V Power Supply Schematic	154-221	0103-00-0089	Rear Panel Assy	154-001	0102-00-0331
			Rear Panel Parts List	*	1101-00-0072
6V, 23V Power Supply Assy	154-021	0101-00-0089			
6V, 23V Power Supply Parts List	*	1100-00-0089	Extender Board Assy	154-018	0101-00-0088
			Extender Board Parts List	*	1100-00-0088
D-A Converter Schematic	154-213	0103-00-0083			
D-A Converter Assy	154-013	0101-00-0083			
D-A Converter Parts List	*	1100-00-0083			

*Same as assembly number

5.4 RECOMMENDED SPARE PARTS LIST

Information is provided to maintain the instrument on a board or component level. Price and delivery information should be obtained from the Wavetek representative in your area or directly from the factory.

DESCRIPTION	MFG	PART NO.	QTY
BOARD LEVEL			
15 V, 24 V POWER SUPPLY BOARD	WAVETEK	154-011	1
FREQ RANGING BOARD	WAVETEK	154-012	1
D/A CONVERTER BOARD	WAVETEK	154-013	1
D/A AMPLIFIER BOARD	WAVETEK	154-014	1
VCG BOARD	WAVETEK	154-016	1
6 V, 23 V POWER SUPPLY BOARD	WAVETEK	154-021	1
COMPONENT LEVEL			
DIODE TUNNEL	GE	1N3716	1
DIODE	SEMTECH	SCE-1	2
DIODE	FAIRCHILD	FD777	1
DIODE	FAIRCHILD	FD6666	8
★DIODE –69	FAIRCHILD	FD6666	2
DIODE ZENER	WAVETEK	130-506	2
FUSE ½A 115 V	LITTELFUSE	313-500	1
FUSE ¼A 230 V	LITTELFUSE	313-250	
★INTEGRATED CKT –13	FAIRCHILD	μA709C	2
★INTEGRATED CKT –14	FAIRCHILD	μA709C	2
INTEGRATED CKT	RCA	CA3028A	1
INTEGRATED CKT	RCA	CA3049	1
INTEGRATED CKT	MOTOROLA	MC1595L	1
INTEGRATED CKT	MOTOROLA	MC3050P	1
LAMP	MURA	BP 28/40	2
RELAY	JENCO	RR30-1023	2
RELAY	JENCO	RR30-1024	2
SINE MODULE	WAVETEK	B142-011	1
TRANSISTORS	FAIRCHILD	2N3638	8
TRANSISTORS	FAIRCHILD	2N3642	2
TRANSISTORS	FAIRCHILD	2N3646	8
TRANSISTORS	FAIRCHILD	2N4248	2
TRANSISTORS	MOTOROLA	MPS L08	1
TRANSISTORS	MOTOROLA	2N2905A	1
★TRANSISTORS –52	MOTOROLA	2N3563	2
★TRANSISTORS –53	MOTOROLA	2N5485	2
★TRANSISTORS –54	MOTOROLA	2N5485	1
★TRANSISTORS –55	MOTOROLA	2N5462	1
★TRANSISTORS –66	MOTOROLA	2N2219A	2
TRANSISTORS	TEXAS INST	TIP 29	2
TRANSISTORS	TEXAS INST	TIP 30	2
TRANSISTORS	TECH PROD	TP 308	1

★Denotes special selected parts and should be ordered from Wavetek.

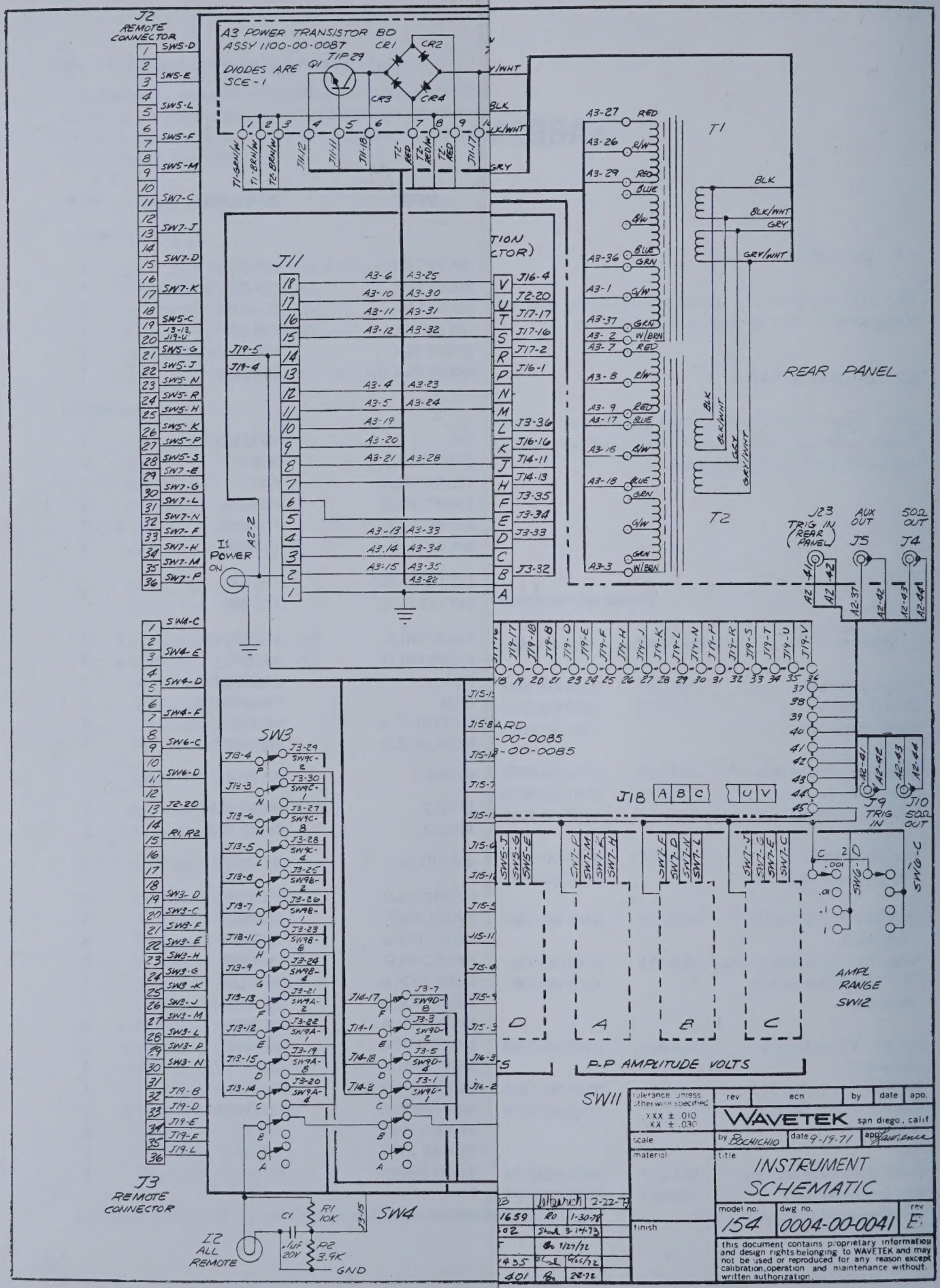
J2 REMOTE CONNECTOR
A3 POWER TRANSISTOR BD ASSY 1100-00-0087
DIODES ARE SCE-1
Q1 TIP 29
CR1
CR2
CR3
CR4
T1
T2
REAR PANEL
J11
J19-5
J19-4
I1 POWER ON
A2-2
J23 TRIG IN (REAR PANEL)
J5 AUX OUT
J4 50Ω OUT
J9 TRIG IN
J10 50Ω OUT
J18 A B C U V
SW3
SW4
SW11
SW12
J3 REMOTE CONNECTOR
I2 ALL REMOTE
R1 10K
R2 3.9K
C1 .1uF 20V
GND
P-P AMPLITUDE VOLTS
AMPL RANGE SW12
A
B
C
D
tolerance unless otherwise specified
XXX ± .010
XX ± .030
WAVETEK san diego, calif
scale
material
finish
by BOCHICHIO
date 9-19-71
app Lawrence
title
INSTRUMENT SCHEMATIC
model no. 154
dwg no. 0004-00-0041
rev E
this document contains proprietary information and design rights belonging to WAVETEK and may not be used or reproduced for any reason except calibration, operation and maintenance without written authorization.

Thank You for buying Wavetek's products.

We are constantly trying to bring you the best in electrical test instrumentation. You can help us by answering the few questions on the Instrument Warranty Card. If you have any questions on the use, application or service of your new Wavetek instrument, please call the nearest sales or service office.

Please detach and return this postage paid postcard.

INSTRUMENT WARRANTY CARD

Model _____ Serial No. _____ Date Received _____

Company Name _____ City _____ State _____

Your Name _____ Title _____

Condition When Received: Satisfactory _____ Unsatisfactory _____

(If Unsatisfactory, List Phone No. (_____) _____ Ext _____)

Application or Use _____

_____

Did you purchase this instrument as the result of: ☐ Advertising ☐ Trade Show

☐ Wavetek Salesman ☐ Other

What trade publication do you regularly use to aid you in your selection of electronic instruments _____

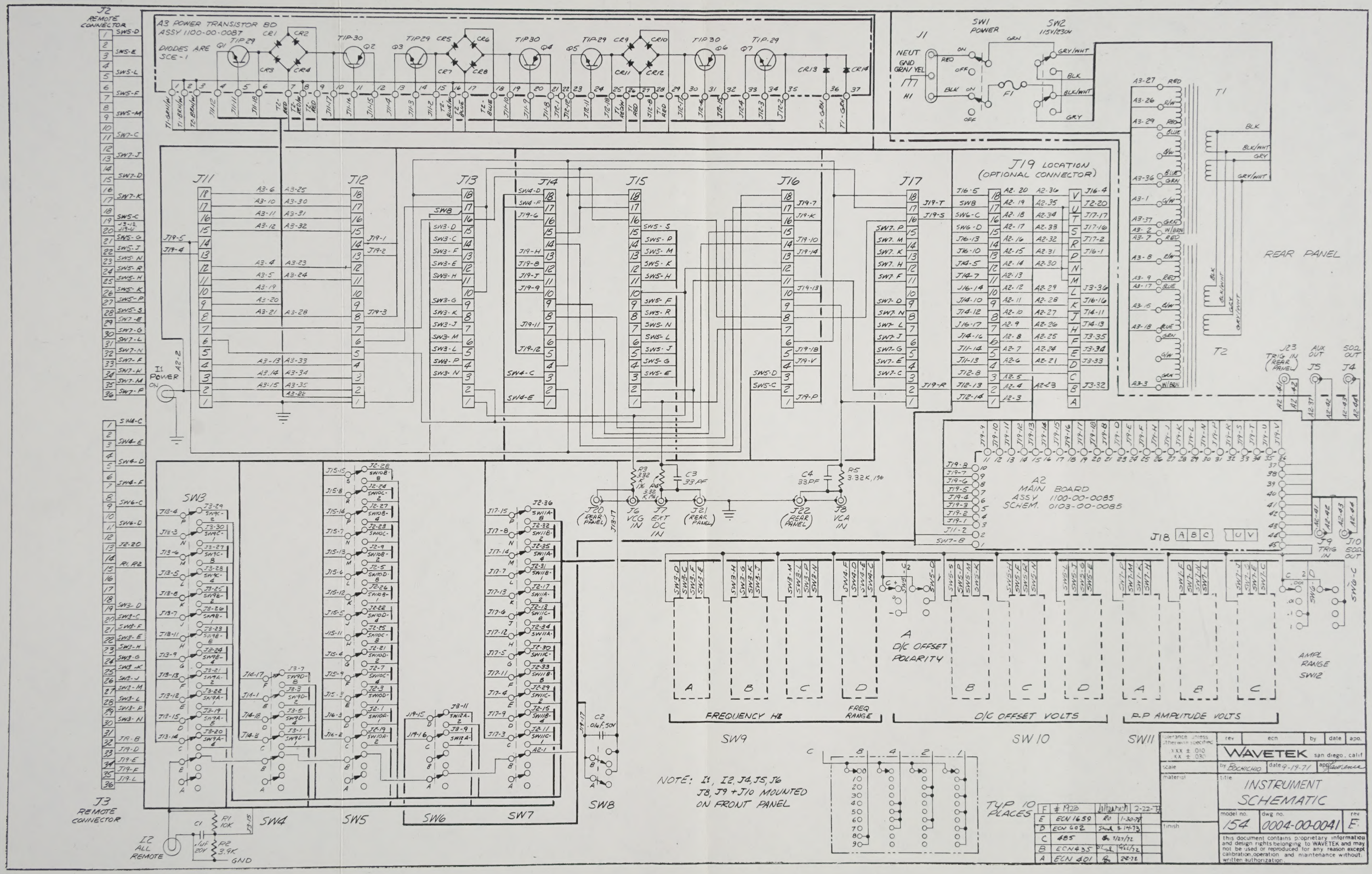

J2 REMOTE CONNECTOR
A3 POWER TRANSISTOR BD
ASSY 1100-00-0087
DIODES ARE SCE-1
J1
SW1 POWER
SW2 115V/230V
NEUT
GND GRN/YEL
H1
F1
T1
T2
REAR PANEL
J11
J12
J13
J14
J15
J16
J17
J19 LOCATION (OPTIONAL CONNECTOR)
I1 POWER
J23 TRIG IN (REAR PANEL)
AUX OUT
50Ω OUT
J5
J4
A2 MAIN BOARD
ASSY 1100-00-0085
SCHEM. 0103-00-0085
J18
J9 TRIG IN
J10 50Ω OUT
J20 (REAR PANEL)
J6 VCG IN
J7 EXT DC IN
J21 (REAR PANEL)
J22 (REAR PANEL)
J8 VCA IN
SW3
SW4
SW5
SW6
SW7
SW8
J3 REMOTE CONNECTOR
I2 ALL REMOTE
GND
A D/C OFFSET POLARITY
AMPL RANGE SW12
FREQUENCY HZ
FREQ RANGE
D/C OFFSET VOLTS
P-P AMPLITUDE VOLTS
SW9
SW10
SW11
NOTE: I1, I2, J4, J5, J6 J8, J9 + J10 MOUNTED ON FRONT PANEL
TYP 10 PLACES
F # 1923 2-22-73
E ECN 1659 1-30-78
D ECN 602 3-14-73
C 485 1/27/72
B ECN 435 4/26/72
A ECN 401 2-2-72
WAVETEK san diego, calif
by BOCHICHIO date 9-19-71
INSTRUMENT SCHEMATIC
model no. 154
dwg no. 0004-00-0041
rev E

Thank You for buying Wavetek's products.

We are constantly trying to bring you the best in electrical test instrumentation. You can help us by answering the few questions on the Instrument Warranty Card. If you have any questions on the use, application or service of your new Wavetek instrument, please call the nearest sales or service office.

Please detach and return this postage paid postcard.

INSTRUMENT WARRANTY CARD

Model _____ Serial No. _____ Date Received _____

Company Name _____ City _____ State _____

Your Name _____ Title _____

Condition When Received: Satisfactory _____ Unsatisfactory _____

(If Unsatisfactory, List Phone No. (_____) _____ Ext_____)

Application or Use _____

_____

Did you purchase this instrument as the result of: ☐ Advertising ☐ Trade Show

☐ Wavetek Salesman ☐ Other

What trade publication do you regularly use to aid you in your selection of electronic instruments _____

Representatives

1 WARD/DAVIS ASSOCIATES
Redondo Beach, CA 90278
Telephone: 213/973-7772
Santa Clara, CA 95051
Telephone: 408/245-3700
San Diego, CA 92108
Telephone: 714/298-8912

2 PACIFIC NW ELECTRONICS
Bellevue, WA 98007
Telephone: 206/641-6444
Portland, OR 97221
Telephone: 503/292-3505

3 BFA CORPORATION
Denver, CO 80239
Telephone: 303/371-2422
Scottsdale, AZ 85251
Telephone: 602/994-5400
Las Cruces, NM 88001
Telephone: 505/523-0601
Albuquerque, NM 87111
Telephone: 505/292-1212
Salt Lake City, UT 84115
Telephone: 801/466-6522

4 DYTEC/NORTH, INC.
St. Paul, MN 55104
Telephone: 612/645-5816

5 DYTEC/SOUTH, INC.
Hazelwood, MO 63042
Telephone: 314/731-5400
Lenexa, KS 66214
Telephone: 913/888-0215

6 DATA MARKETING ASSOC
Houston, TX 77057
Telephone: 713/780-2511
Dallas, TX 75234
Telephone: 214/661-0300
San Antonio, TX 78217
Telephone: 512/828-0937
Oklahoma City, OK 73112
Telephone: 405/528-6071
Austin, TX 78752
Telephone: 512/451-5174

7 DYTEC/CENTRAL, INC.
Arlington Heights, IL 60004
Telephone: 312/394-3380
Indianapolis, IN 46224
Telephone: 317/247-1316
Iowa City, IA 55240
Telephone: 319/683-2282

8 W.A. BROWN INSTRUMENTS
Orlando, FL 32802
Telephone: 305/425-5505
Ft. Lauderdale, FL 33309
Telephone: 305/776-4800
Tallahassee, FL 32303
Telephone: 904/878-6642
1201 St. Andrews Road
Columbia, SC 29210
Telephone: 803/798-8070
Melbourne, FL 32901
Telephone: 305/723-0766
Huntsville, AL 35802
Telephone: 205/883-8660
Atlanta, GA 30340
Telephone: 404/455-1035
Oak Ridge, TN 37830
Telephone: 615/482-5761
Mandeville, LA 70448
Telephone: 504/626-9701
Durham, NC 27701
Telephone: 919/682-2383

9 WKM ASSOCIATES, INC.
Cleveland, OH 44135
Telephone: 216/267-0445
Dayton, OH 45459
Telephone: 513/434-7500
Madison Height, MI 48071
Telephone: 313/588-2300
Pittsburgh, PA 15236
Telephone: 412/892-2953

10 NACO ELECTRONICS CORP.
N. Syracuse, NY 13212
Telephone: 315/699-2651
Utica, NY 13501
Telephone: 315/732-1801
Fairport, NY 14450
Telephone: 716/223-4490

11 EASTERN INSTRUMENTATION OF PHILADELPHIA, INC.
Bensalem, PA 19020
Telephone: 215/245-6660

12 CREATIVE MARKETING ASSOC
McLean, VA 22101
Telephone: 703/893-6612

13 SET MARKETING, INC.
Great Neck, L.I., NY 11021
Telephone: 516/466-0550

14 PAT JENKS ASSOCIATES
Hamden,CT 06518
Telephone: 203/281-0810
Wakefield, MA 01880
Telephone: 617/246-1590

15 ALLAN CRAWFORD ASSOC
Mississauga, Ontario, Canada
Telephone: 416/678-1500
Ottawa, Ontario, Canada
Telephone: 613/829-9651
St. Laurent, P.Q., Canada
Telephone: 514/731-8564
Calgary, Alberta, Canada
Telephone: 403/230-1341
Burnaby, British Columbia, Canada
Telephone: 604/294-1326
Dartmouth, Nova Scotia, Canada
Telephone: 902/469-7865

WAVETEK®
SAN DIEGO

NO POSTAGE
NECESSARY
IF MAILED
IN THE
UNITED STATES

BUSINESS REPLY CARD

FIRST CLASS PERMIT NO. 5656 SAN DIEGO, CA

POSTAGE WILL BE PAID BY ADDRESSEE

WAVETEK San Diego
P.O. Box 651
San Diego, CA 92112

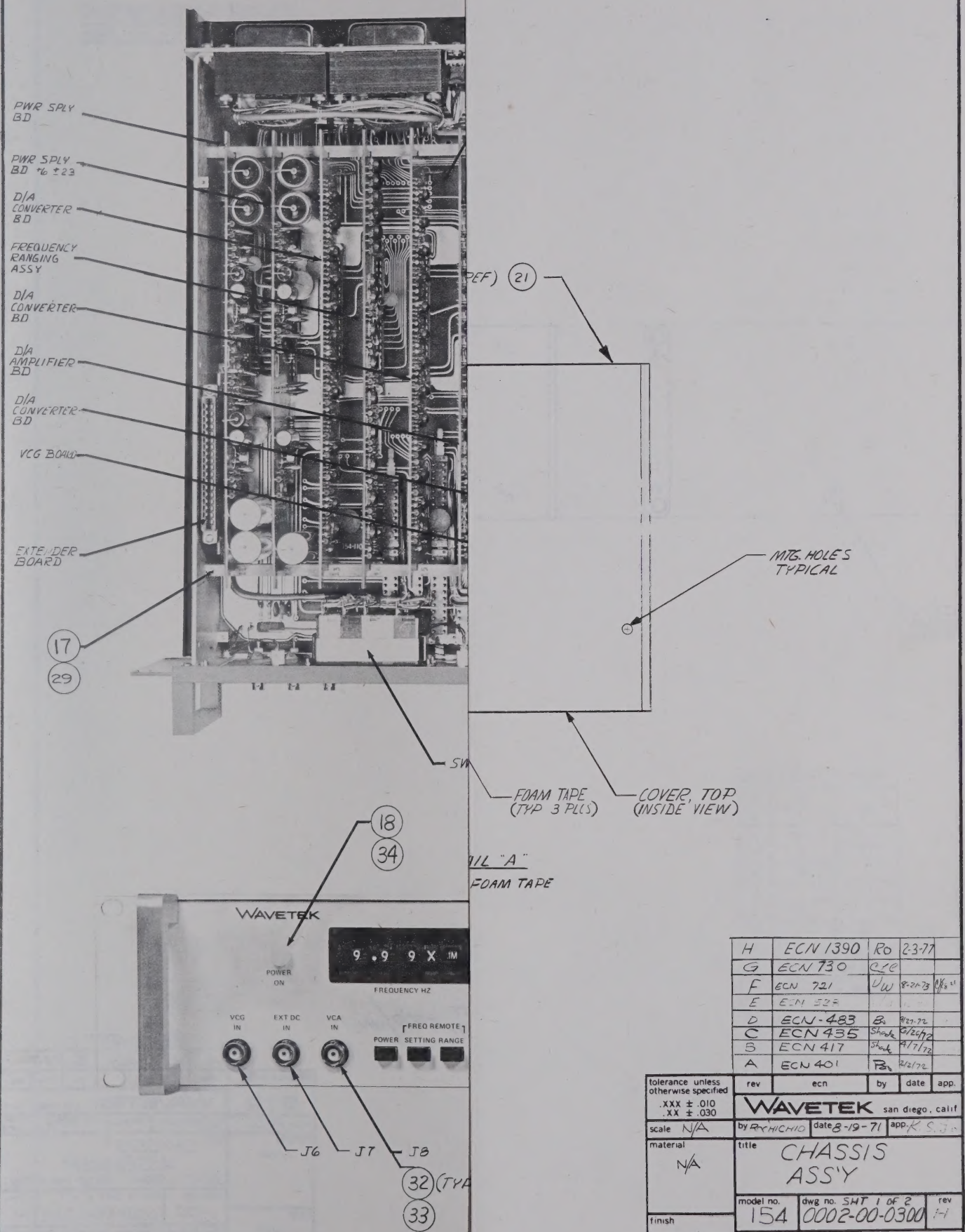

H	ECN 1390	RO	2-3-77
G	ECN 730	C.C.	
F	ECN 721	UW	8-21-73
E	ECN 528		
D	ECN-483	BS	9-27-72
C	ECN 435	Shade	6/26/72
B	ECN 417	Shade	4/7/72
A	ECN 401	BS	2/2/72

rev	ecn	by	date	app.

tolerance unless otherwise specified .XXX ± .010 .XX ± .030

WAVETEK san diego, calif

scale N/A | by RICHIO | date 8-19-71 | app. K S J

material N/A

title CHASSIS ASS'Y

model no. 154 | dwg no. SHT 1 OF 2 0002-00-0300 | rev H

finish N/A

this document contains proprietary information and design rights belonging to WAVETEK and may not be used or reproduced for any reason except calibration, operation and maintenance without written authorization.

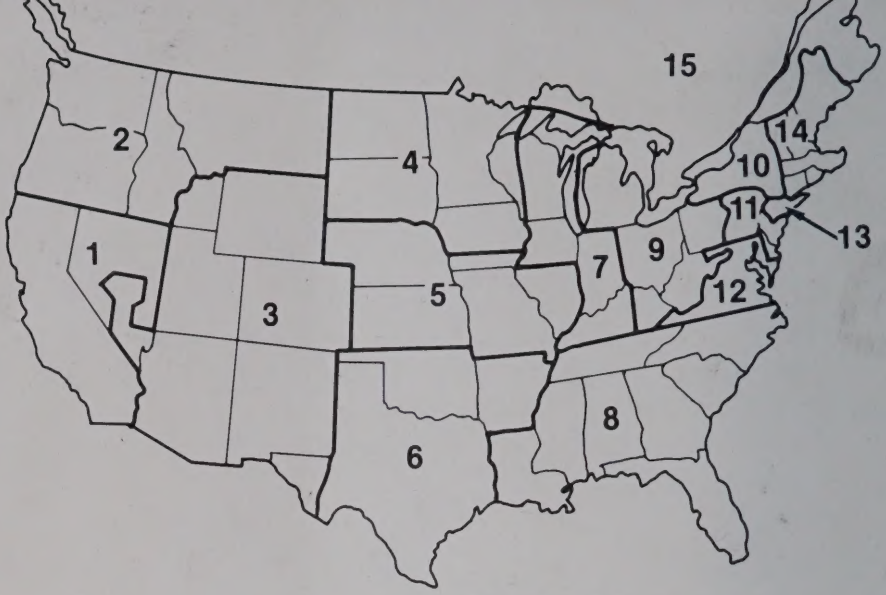

Representatives

1 WARD/DAVIS ASSOCIATES
Redondo Beach, CA 90278
Telephone: 213/973-7772
Santa Clara, CA 95051
Telephone: 408/245-3700
San Diego, CA 92108
Telephone: 714/298-8912

2 PACIFIC NW ELECTRONICS
Bellevue, WA 98007
Telephone: 206/641-6444
Portland, OR 97221
Telephone: 503/292-3505

3 BFA CORPORATION
Denver, CO 80239
Telephone: 303/371-2422
Scottsdale, AZ 85251
Telephone: 602/994-5400
Las Cruces, NM 88001
Telephone: 505/523-0601
Albuquerque, NM 87111
Telephone: 505/292-1212
Salt Lake City, UT 84115
Telephone: 801/466-6522

4 DYTEC/NORTH, INC.
St. Paul, MN 55104
Telephone: 612/645-5816

5 DYTEC/SOUTH, INC.
Hazelwood, MO 63042
Telephone: 314/731-5400
Lenexa, KS 66214
Telephone: 913/888-0215

6 DATA MARKETING ASSOC
Houston, TX 77057
Telephone: 713/780-2511
Dallas, TX 75234
Telephone: 214/661-0300
San Antonio, TX 78217
Telephone: 512/828-0937
Oklahoma City, OK 73112
Telephone: 405/528-6071
Austin, TX 78752
Telephone: 512/451-5174

7 DYTEC/CENTRAL, INC.
Arlington Heights, IL 60004
Telephone: 312/394-3380
Indianapolis, IN 46224
Telephone: 317/247-1316
Iowa City, IA 55240
Telephone: 319/683-2282

8 W.A. BROWN INSTRUMENTS
Orlando, FL 32802
Telephone: 305/425-5505
Ft. Lauderdale, FL 33309
Telephone: 305/776-4800
Tallahassee, FL 32303
Telephone: 904/878-6642
1201 St. Andrews Road
Columbia, SC 29210
Telephone: 803/798-8070
Melbourne, FL 32901
Telephone: 305/723-0766
Huntsville, AL 35802
Telephone: 205/883-8660
Atlanta, GA 30340
Telephone: 404/455-1035
Oak Ridge, TN 37830
Telephone: 615/482-5761
Mandeville, LA 70448
Telephone: 504/626-9701
Durham, NC 27701
Telephone: 919/682-2383

9 WKM ASSOCIATES, INC.
Cleveland, OH 44135
Telephone: 216/267-0445
Dayton, OH 45459
Telephone: 513/434-7500
Madison Height, MI 48071
Telephone: 313/588-2300
Pittsburgh, PA 15236
Telephone: 412/892-2953

10 NACO ELECTRONICS CORP.
N. Syracuse, NY 13212
Telephone: 315/699-2651
Utica, NY 13501
Telephone: 315/732-1801
Fairport, NY 14450
Telephone: 716/223-4490

11 EASTERN INSTRUMENTATION OF PHILADELPHIA, INC.
Bensalem, PA 19020
Telephone: 215/245-6660

12 CREATIVE MARKETING ASSOC
McLean, VA 22101
Telephone: 703/893-6612

13 SET MARKETING, INC.
Great Neck, L.I., NY 11021
Telephone: 516/466-0550

14 PAT JENKS ASSOCIATES
Hamden,CT 06518
Telephone: 203/281-0810
Wakefield, MA 01880
Telephone: 617/246-1590

15 ALLAN CRAWFORD ASSOC
Mississauga, Ontario, Canada
Telephone: 416/678-1500
Ottawa, Ontario, Canada
Telephone: 613/829-9651
St. Laurent, P.Q., Canada
Telephone: 514/731-8564
Calgary, Alberta, Canada
Telephone: 403/230-1341
Burnaby, British Columbia, Canada
Telephone: 604/294-1326
Dartmouth, Nova Scotia, Canada
Telephone: 902/469-7865

WAVETEK®
SAN DIEGO

NO POSTAGE NECESSARY IF MAILED IN THE UNITED STATES

BUSINESS REPLY CARD

FIRST CLASS PERMIT NO. 5656 SAN DIEGO, CA

POSTAGE WILL BE PAID BY ADDRESSEE

WAVETEK San Diego
P.O. Box 651
San Diego, CA 92112

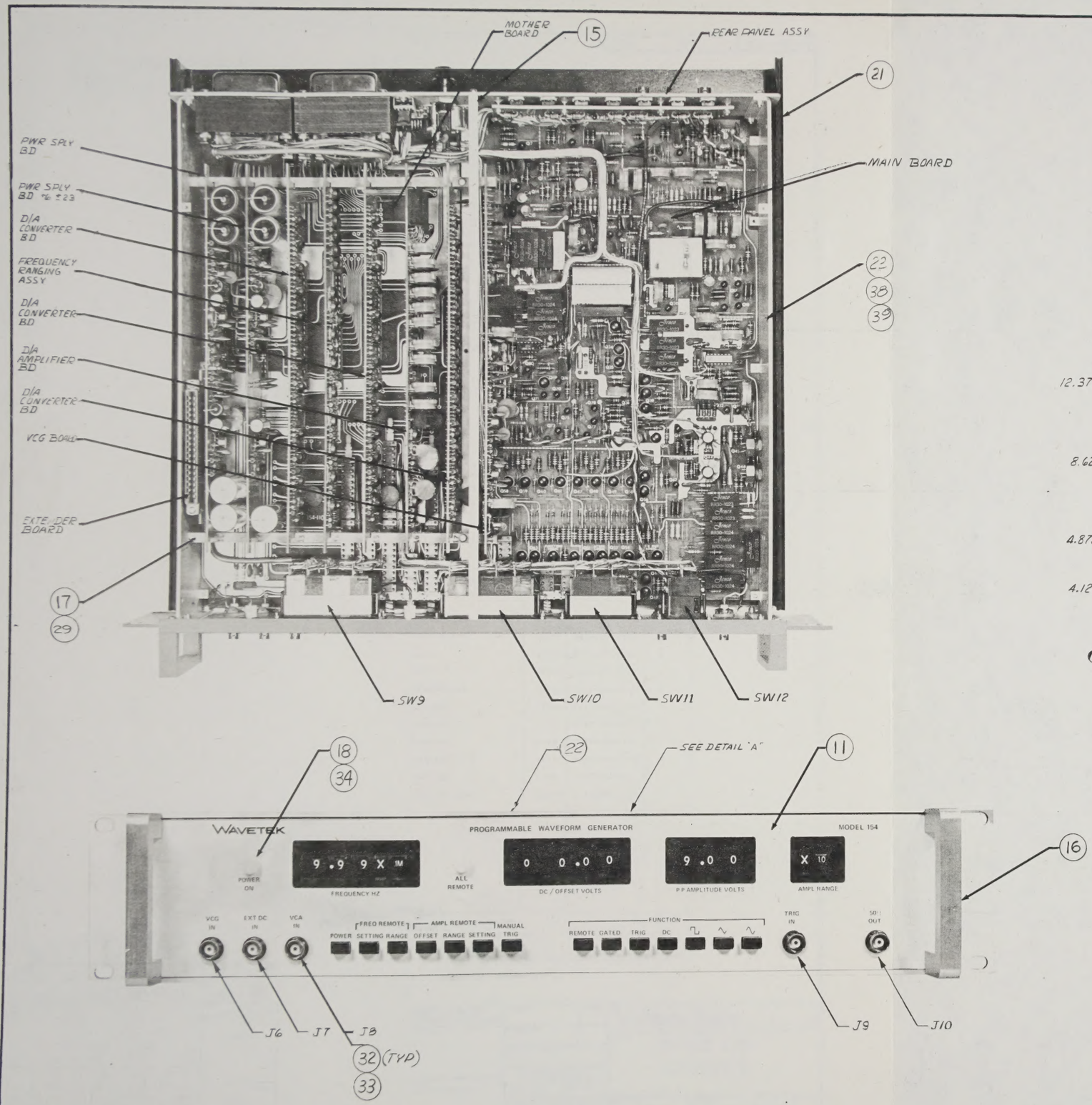

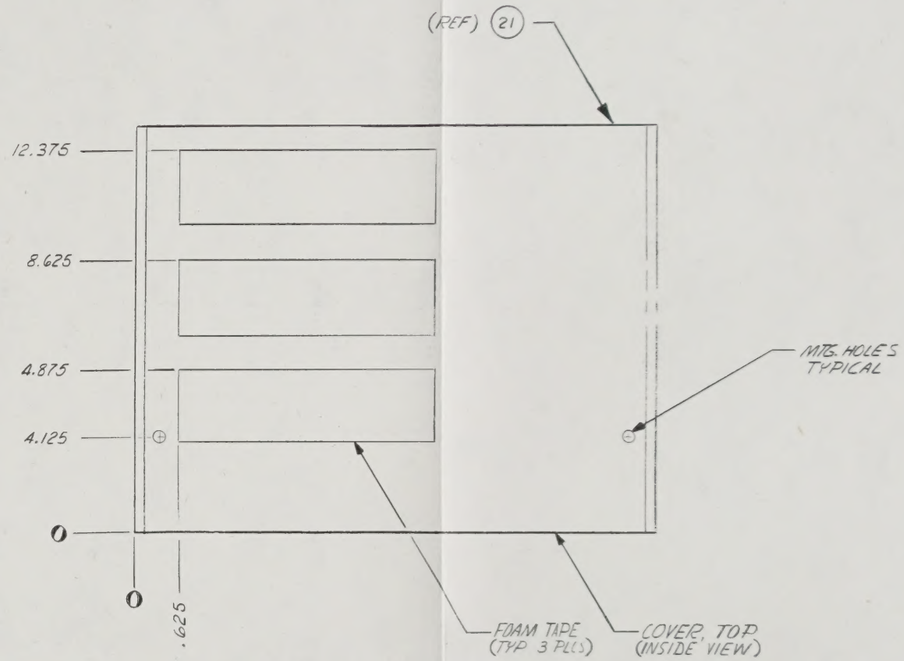

DETAIL "A"

INSTALLATION OF FOAM TAPE

rev	ecn	by	date	app.
H	ECN 1390	Ro	2-3-77	
G	ECN 730	[illegible]		
F	ECN 721	[illegible]	8-21-73	[illegible]
E	ECN 528			
D	ECN-483	[illegible]	9/27-72	
C	ECN 435	[illegible]	6/26/72	
B	ECN 417	[illegible]	4/7/72	
A	ECN 401	[illegible]	2/2/72	

tolerance unless otherwise specified .XXX ± .010 .XX ± .030

WAVETEK san diego, calif

scale N/A

by [illegible] date 8-19-71 app. [illegible]

material N/A

title CHASSIS ASS'Y

model no. 154

dwg no. SHT 1 OF 2 0002-00-0300

rev H

finish N/A

this document contains proprietary information and design rights belonging to WAVETEK and may not be used or reproduced for any reason except calibration, operation and maintenance without written authorization.

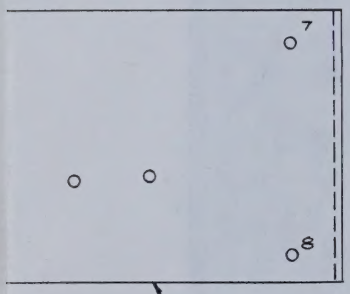

SIDE PLATE
1400-00-2843

HOWN
ITED

1 LEFT
1 RIGHT REQ'D/UNIT

SEE SHEET 1

rev	ecn	by	date	app.
A	ECN 401	BO	2-2-72	

tolerance unless otherwise specified
.XXX ± .010
.XX ± .030

WAVETEK san diego, calif

scale FULL

by BOCHICHIO date 11-11-71 app. K.S.F.

material N/A

finish N/A

title CHASSIS ASSEMBLY
LEFT + RIGHT SIDE PLATES

model no.	dwg no.	rev
154	SHT 2 of 2 0002-00-0300	H

this document contains proprietary information and design rights belonging to WAVETEK and may not be used or reproduced for any reason except calibration, operation and maintenance without written authorization.

THIS DOCUMENT CONTAINS PROPRIETARY INFORMATION AND DESIGN RIGHTS BELONGING TO WAVETEK AND MAY NOT BE REPRODUCED FOR ANY REASON EXCEPT CALIBRATION, OPERATION, AND MAINTENANCE WITHOUT WRITTEN AUTHORIZATION.

REV	ECN	BY	DATE	APP

ORIG-MFGR-PART-NO	MFGR	WAVETEK NO.	QTY/PT
0102-00-0300	WVTK	0102-00-0300	1
154-004	WVTK	1201-00-0020	1
144-305	WVTK	1400-00-2113	2
154-300	WVTK	1400-00-2810	1
154-303	WVTK	1400-00-2843	2
154-304	WVTK	1400-00-2853	1
154-305	WVTK	1400-00-2863	1
154-310	WVTK	1400-00-2880	2
154-311	WVTK	1400-00-2890	2
154-319	WVTK	1400-00-2922	2
154-320	WVTK	1400-00-2933	2
154-324	WVTK	1400-00-5560	1
1400-01-0990	WVTK	1400-01-0990	1
KC-7946	KING	2100-01-0002	5
57-30360	AMPH	2100-02-0038	2
1497	SMITH	2100-04-0012	5

ASSEMBLY NO. 1101-00-0041 REV J

PAGE: 1

ORIG-MFGR-PART-NO	MFGR	WAVETEK NO.	QTY/PT
T81D100-632	ROOTS	2800-09-0013	4
1591-C11	USECO	2800-09-0022	10
2661	SMITH	2800-27-0002	2
2668	SMITH	2800-27-0004	5
2264-A-385	AMTOM	2800-28-0005	5
5305-31	THORC	2800-36-0002	2
154-400	WVTK	5107-00-0001	1
154-401	WVTK	5107-00-0002	1
154-402	WVTK	5107-00-0003	1
154-403	WVTK	5107-00-0004	1
0-7788-00A-GY	PACKD	6001-80-0005	1

ASSEMBLY NO. 1101-00-0041 REV J

PAGE: 2

REMOVE ALL BURRS AND BREAK SHARP EDGES

MATERIAL

FINISH WAVETEK PROCESS

NOTE: UNLESS OTHERWISE SPECIFIED

DRAWN | DATE

PROJ ENGR

RELEASE APPROV

TOLERANCE UNLESS OTHERWISE SPECIFIED
.XXX ±.010 ANGLES ±1
.XX ±.030

DO NOT SCALE DWG

SCALE

WAVETEK SAN DIEGO • CALIFORNIA

TITLE

PARTS LIST
CHASSIS

MODEL NO.	DWG NO.	REV
154	1101-00-0041	J

CODE IDENT 23338

SHEET 1 OF 1

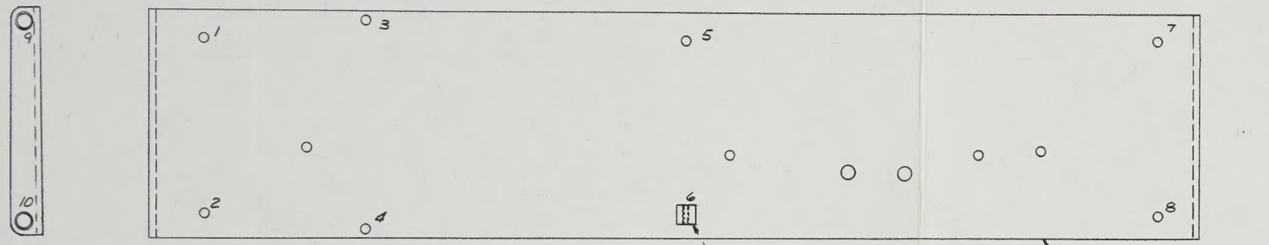

USECO 1591C
INSTALL AS SHOWN
WHERE INDICATED

SIDE PLATE
1400-00-2843

HOLE	LEFT	RIGHT
1	X	
2		X
3	X	X
4	X	X
5	X	
6		X
7	X	
8		X
9	INSTALL BOOTS FASTENERS TBIDO109 LEFT & RIGHT	
10		

X INDICATES INSTALL BLOCK

1 LEFT
1 RIGHT REQ'D/UNIT

SEE SHEET 1

rev	ecn	by	date	app.
A	ECN 401	BO	2-2-72	

tolerance unless otherwise specified .XXX ± .010 .XX ± .030

WAVETEK san diego, calif

scale FULL | by BOCHICHIO | date 11-11-71 | app. K.S.F.

material N/A

title CHASSIS ASSEMBLY LEFT + RIGHT SIDE PLATES

model no. 154 | dwg no. SHT 2 of 2 0002-00-0300 | rev H

finish N/A

this document contains proprietary information and design rights belonging to WAVETEK and may not be used or reproduced for any reason except calibration, operation and maintenance without written authorization.

THIS DOCUMENT CONTAINS PROPRIETARY INFORMATION AND DESIGN RIGHTS BELONGING TO WAVETEK AND MAY NOT BE REPRODUCED FOR ANY REASON EXCEPT CALIBRATION, OPERATION, AND MAINTENANCE WITHOUT WRITTEN AUTHORIZATION.

REV	ECN	BY	DATE	APP

REFERENCE DESIGNATORS	PART DESCRIPTION	ORIG-MFGR-PART-NO	MFGR	WAVETEK NO.	QTY/PT
NONE	ASSY DRWG,CHASSIS	0102-00-0300	WVTK	0102-00-0300	1
22	SUB PANEL ASSY	154-004	WVTK	1201-00-0020	1
29	SPACER	144-305	WVTK	1400-00-2113	2
11	PANEL,FT	154-300	WVTK	1400-00-2810	1
23	RAIL,SIDE	154-303	WVTK	1400-00-2843	2
14	BAR,SUPT	154-304	WVTK	1400-00-2853	1
15	BAR,SUPT,TOP	154-305	WVTK	1400-00-2863	1
17	GUIDE,BD	154-310	WVTK	1400-00-2880	2
18	LENS,INDICATOR	154-311	WVTK	1400-00-2890	2
21	COVER	154-319	WVTK	1400-00-2922	2
16	HANDLE REF:3200-06-0001	154-320	WVTK	1400-00-2933	2
NONE	SHIELD,INSULATOR REF:3200-03-0004	154-324	WVTK	1400-00-5560	1
NONE	ID LABEL SPECIAL INSTRUMENT	1400-01-0990	WVTK	1400-01-0990	1
J10 J6 J7 J8 J9	BNC CONN	KC-7946	KING	2100-01-0002	5
NONE	CONN	57-30360	AMPH	2100-02-0038	2
31	SOLDER LUG	1497	SWITH	2100-04-0012	5

WAVETEK PARTS LIST	TITLE STD CHASSIS	ASSEMBLY NO. 1101-00-0041 PAGE: 1	REV J

REFERENCE DESIGNATORS	PART DESCRIPTION	ORIG-MFGR-PART-NO	MFGR	WAVETEK NO.	QTY/PT
40	INSERT,BANC,LOC	TRID100-632	BOOTS	2800-09-0013	4
41	FAST,CHASSIS	1591-C11	USECO	2800-09-0022	10
43	WASHER,SHOULDER	2661	SWITH	2800-27-0002	2
32	WASHER,SHOULDER	2668	SWITH	2800-27-0004	5
33	NYLON FLAT WASHER	2264-N-385	AMTOM	2800-28-0005	5
34	RETAINING RING	5305-31	TRURC	2800-36-0002	2
SW9	SWITCH ASSY DIGI	154-400	WVTK	5107-00-0001	1
SW10	SWITCH ASSY DIGI	154-401	WVTK	5107-00-0002	1
SW11	SWITCH ASSY DIGI	154-402	WVTK	5107-00-0003	1
SW12	SWITCH ASSY DIGI	154-403	WVTK	5107-00-0004	1
41	PWR CORD	0-7788-00A-GY	PACWD	6001-80-0005	1

WAVETEK PARTS LIST	TITLE STD CHASSIS	ASSEMBLY NO. 1101-00-0041 PAGE: 2	REV J

NOTE: UNLESS OTHERWISE SPECIFIED

REMOVE ALL BURRS AND BREAK SHARP EDGES	DRAWN	DATE	WAVETEK SAN DIEGO • CALIFORNIA
MATERIAL	PROJ ENGR		TITLE PARTS LIST CHASSIS
	RELEASE APPROV		
FINISH WAVETEK PROCESS	TOLERANCE UNLESS OTHERWISE SPECIFIED XXX ±.010 ANGLES ±1 XX ±.030		
	DO NOT SCALE DWG		MODEL NO. 154 / DWG NO. 1101-00-0041 / REV J
	SCALE		CODE IDENT 23338 / SHEET 1 OF 1

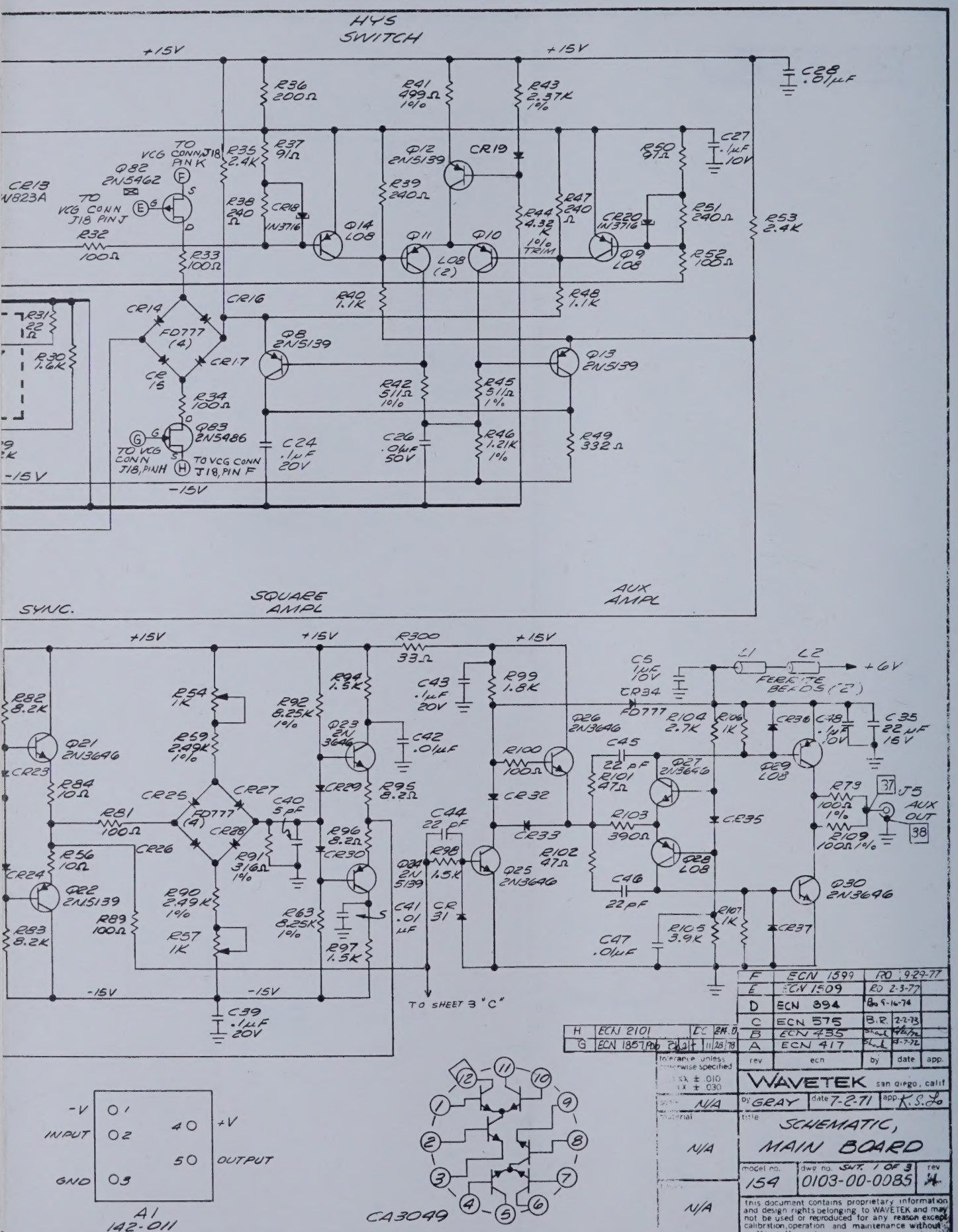

rev	ecn	by	date	app.
F	ECN 1599	RO	9-29-77	
E	ECN 1509	RO	2-3-77	
D	ECN 894	Bo	9-16-74	
C	ECN 575	B.R.	2-2-73	
B	ECN 435	Shank	4/6/72	
A	ECN 417	Shank	4-7-72	

H	ECN 2101	DC	2/4/0
G	ECN 1857	Bob	11/28/78

tolerance unless otherwise specified
XX ± .010
XX ± .030

WAVETEK san diego, calif

by GRAY date 7-2-71 app. K.S.Lo

title SCHEMATIC, MAIN BOARD

model no. 154 dwg no. SHT. 1 OF 3 0103-00-0085 rev H

N/A

N/A

N/A

this document contains proprietary information and design rights belonging to WAVETEK and may not be used or reproduced for any reason except calibration, operation and maintenance without written authorization

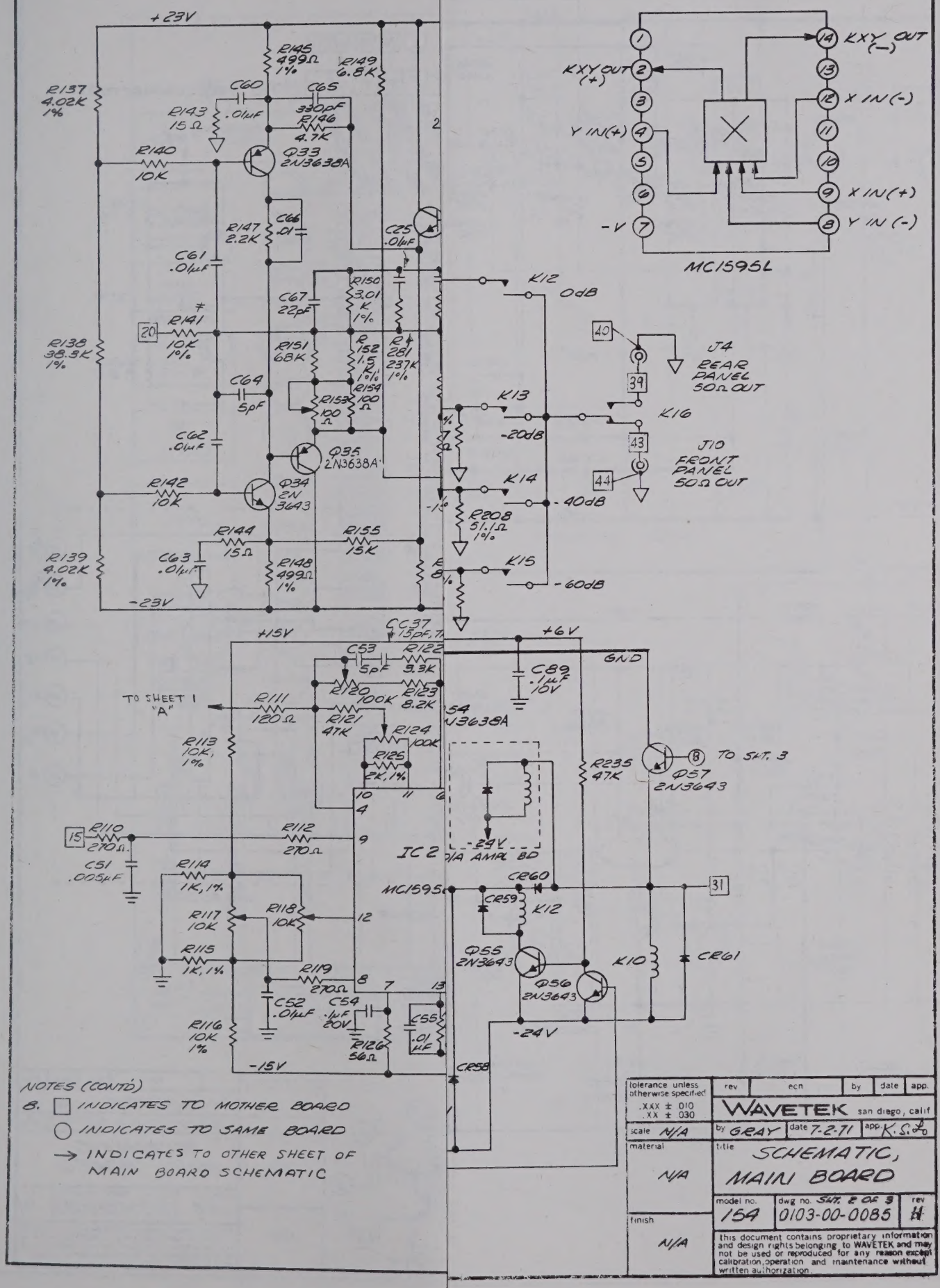

tolerance unless otherwise specified .XXX ± 010 .XX ± 030	rev	ecn	by	date	app.
	WAVETEK san diego, calif				
scale N/A	by GRAY	date 7-2-71	app. K.S.		
material N/A	title SCHEMATIC, MAIN BOARD				
finish N/A	model no. 154	dwg no. SHT. 2 OF 3 0103-00-0085		rev H	

this document contains proprietary information and design rights belonging to WAVETEK and may not be used or reproduced for any reason except calibration, operation and maintenance without written authorization.

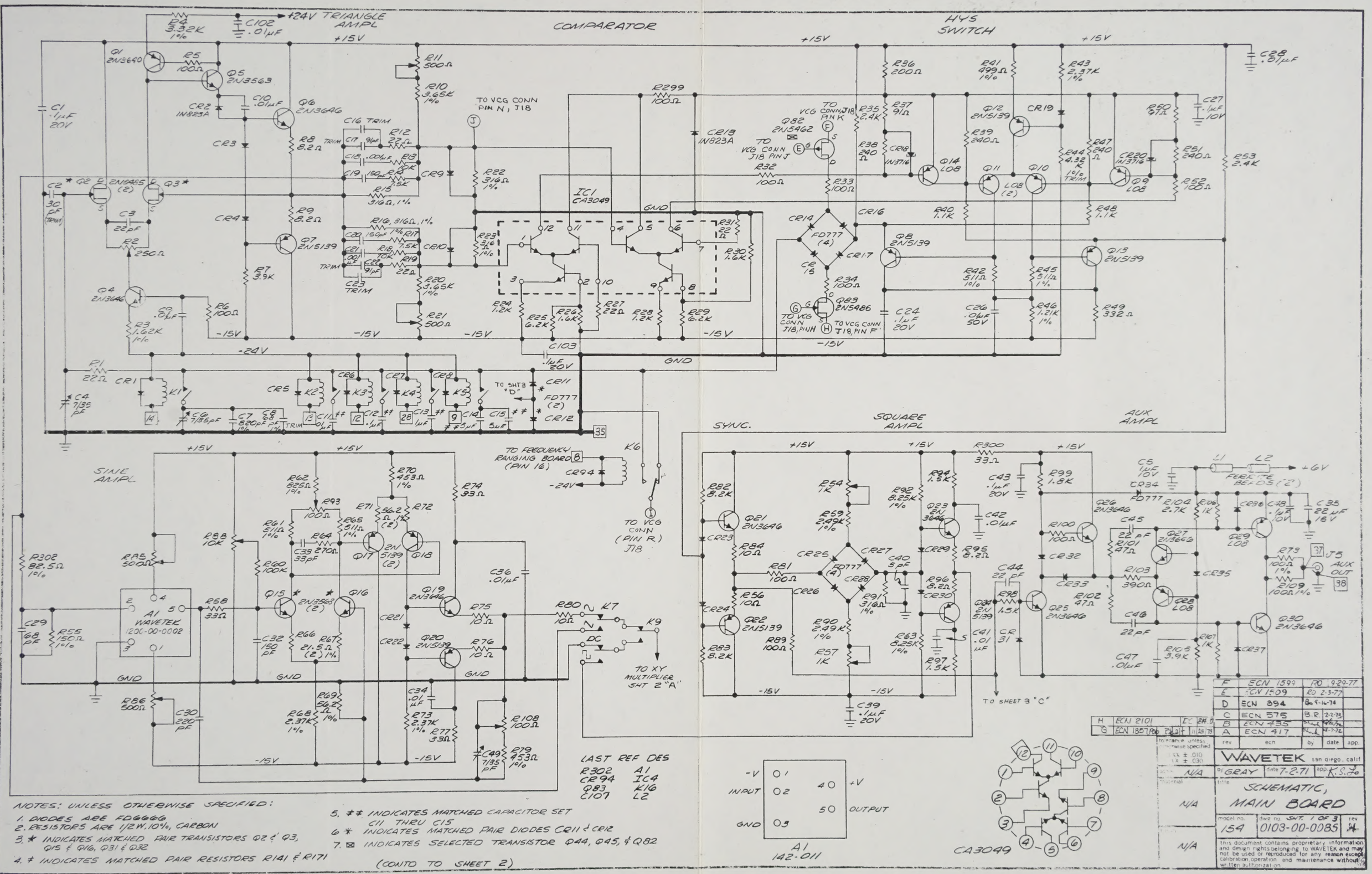

NOTES: UNLESS OTHERWISE SPECIFIED:

1. DIODES ARE FDG666
2. RESISTORS ARE 1/2W, 10%, CARBON
3. * INDICATES MATCHED PAIR TRANSISTORS Q2 & Q3, Q15 & Q16, Q31 & Q32
4. # INDICATES MATCHED PAIR RESISTORS R141 & R171
5. ## INDICATES MATCHED CAPACITOR SET C11 THRU C15
6. * INDICATES MATCHED PAIR DIODES CR11 & CR12
7. ⊠ INDICATES SELECTED TRANSISTOR Q44, Q45, & Q82

(CONT'D TO SHEET 2)

rev	ecn	by	date	app.
F	ECN 1599	RD	9-29-77	
E	ECN 1509	RD	2-3-77	
D	ECN 894	BR	9-16-74	
C	ECN 575	B.R	2-2-73	
B	ECN 435	[illegible]	[illegible]	
A	ECN 417	[illegible]	4-7-72	
H	ECN 2101	DC	2-4-77	
G	ECN 1857	RD	11-28-75	

tolerance unless otherwise specified: XX ± .010, XXX ± .030

WAVETEK san diego, calif

N/A | by GRAY | date 7-2-71 | app K.S.

material: N/A

title: SCHEMATIC, MAIN BOARD

model no. 154 | dwg no SHT. 1 OF 3 0103-00-0085 | rev A

N/A

this document contains proprietary information and design rights belonging to WAVETEK and may not be used or reproduced for any reason except calibration, operation and maintenance without written authorization

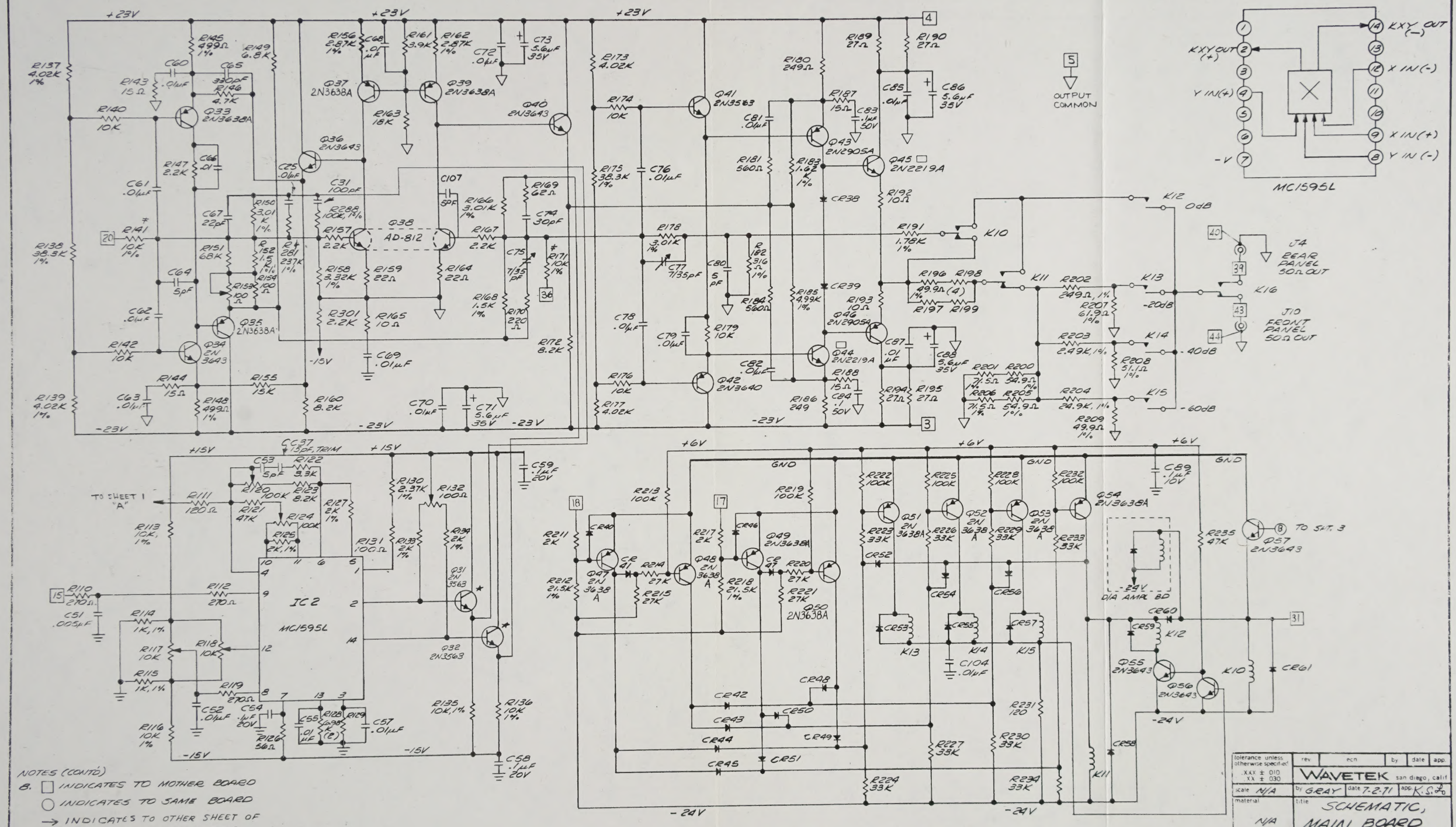

NOTES (CONTD)

8. □ INDICATES TO MOTHER BOARD
   ○ INDICATES TO SAME BOARD
   → INDICATES TO OTHER SHEET OF MAIN BOARD SCHEMATIC

tolerance unless otherwise specified .XXX ± 010 XX ± 030	rev	ecn	by	date	app.
scale N/A	by GRAY	date 7-2-71	app. K.S.J.		
material N/A	title SCHEMATIC, MAIN BOARD				
finish N/A	model no. 154	dwg no. SHT. 2 OF 3 0103-00-0085	rev H		

WAVETEK san diego, calif

this document contains proprietary information and design rights belonging to WAVETEK and may not be used or reproduced for any reason except calibration, operation and maintenance without written authorization

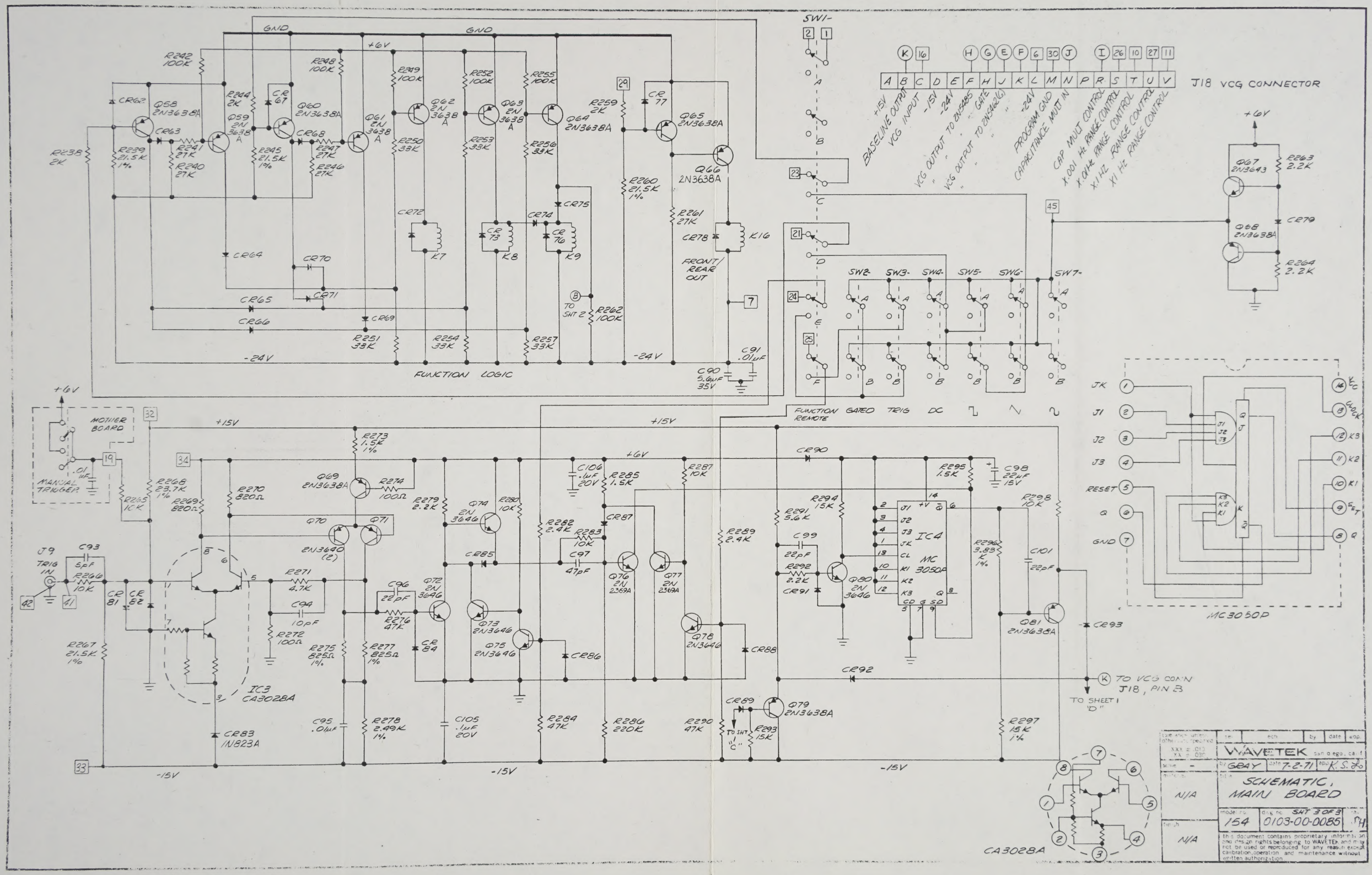

J18 VCG CONNECTOR
+15V BASELINE OUTPUT
VCG INPUT
-15V
-24V
VCG OUTPUT TO 2N5485
VCG OUTPUT TO 2N5462(G)
PROGRAM GND
CAPACITANCE MULT IN
CAP MULT CONTROL
X.001 Hz RANGE CONTROL
X.01Hz RANGE CONTROL
X1 Hz RANGE CONTROL
X1 Hz RANGE CONTROL
FUNCTION LOGIC
FRONT/REAR OUT
TO SHT 2
FUNCTION REMOTE
GATED
TRIG
DC
MOTHER BOARD
MANUAL TRIGGER
J9 TRIG IN
IC3 CA3028A
IC4 MC 3050P
MC3050P
TO VCG CONN J18, PIN B
TO SHEET 1 "D"
TO SHT 1 "C"
CA3028A
WAVETEK san diego, calif
GRAY
7-2-71
K.S.Lo
SCHEMATIC, MAIN BOARD
N/A
154
0103-00-0085
SHT 3 OF 3

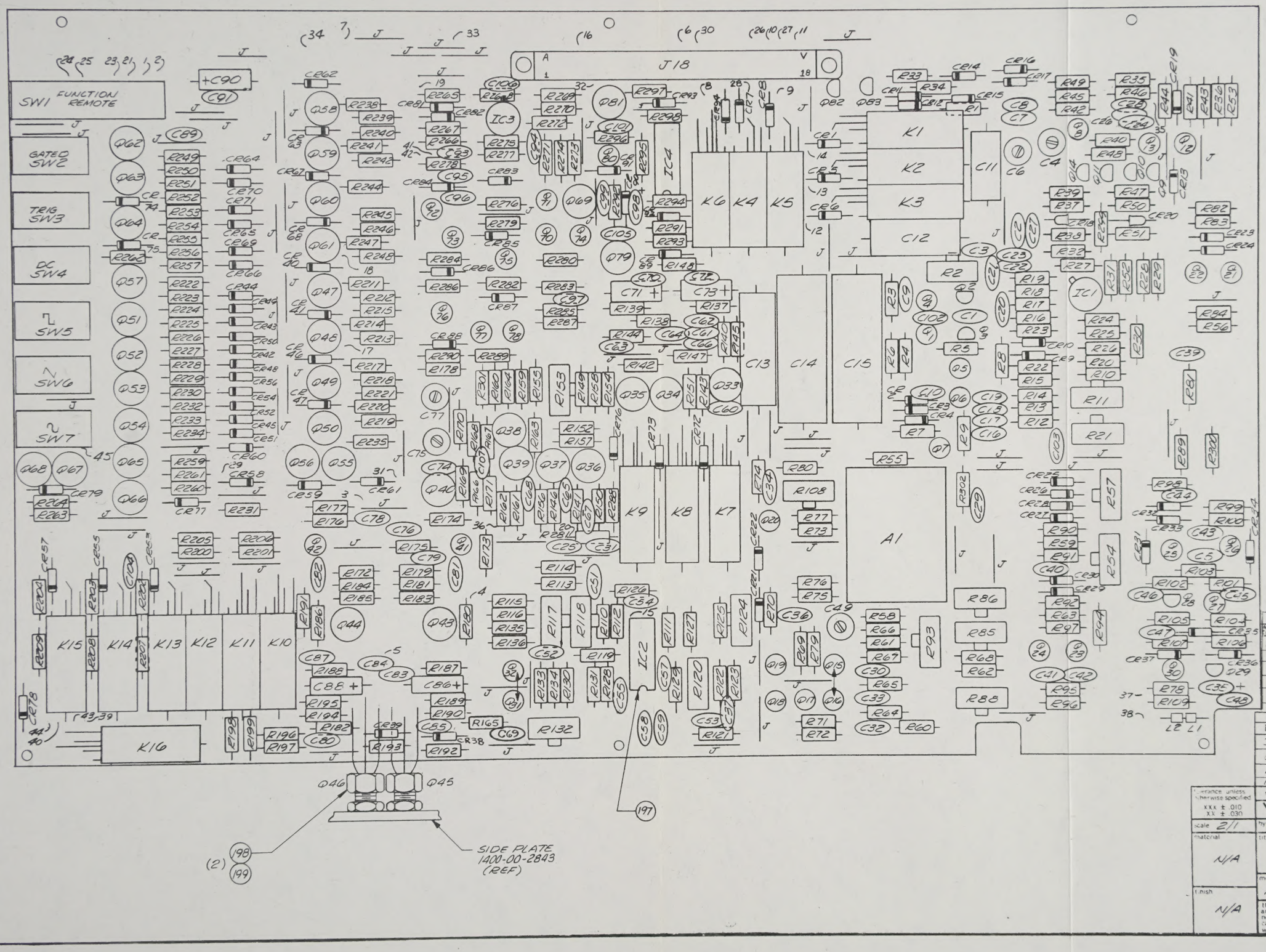
J18
SW1 FUNCTION REMOTE
GATED SW2
TRIG SW3
DC SW4
SW5
SW6
SW7
+C90
C91
C89
IC1
IC2
IC3
IC4
K1
K2
K3
K4
K5
K6
K7
K8
K9
K10
K11
K12
K13
K14
K15
K16
A1
C11
C12
C13
C14
C15
C6
C4
C71
C73
C77
C74
C75
C76
C78
C79
C80
C81
C82
C83
C84
C85
C86
C87
C88
C51
C52
C53
C54
C55
C56
C57
C58
C59
C60
C61
C62
C63
C64
C66
C67
C68
C69
C70
C72
C94
C95
C96
C97
C98
C99
C100
C101
C102
C103
C104
C105
C106
C107
C108
C109
C110
C111
C112
C113
C114
C115
C116
C117
C118
C119
C120
C121
C122
C123
C124
C125
C126
C127
C128
C129
C130
C131
C132
C133

THIS DOCUMENT CONTAINS PROPRIETARY INFORMATION AND DESIGN RIGHTS BELONGING TO WAVETEK AND MAY NOT BE REPRODUCED FOR ANY REASON EXCEPT CALIBRATION, OPERATION, AND MAINTENANCE WITHOUT WRITTEN AUTHORIZATION.

REV	ECN	BY	DATE	APP

REFERENCE DESIGNATIONS	PART DESCRIPTION	ORIG-MFGR-PART-NO	MFGR	WAVETEK NO.	QTY/PT
NONE	ASSY DWG,MAIN	0101-00-0085	WVTK	0101-00-0085	1
NONE	SCHEMATIC,MAIN	0103-00-0085	WVTK	0103-00-0085	1
A1	SINE MOD	142-011	WVTK	1200-00-0002	1
IC8	PATCH BLOCK	154-028	WVTK	1205-00-0489	1
C107	CAP,CER,5PF,1KV	DD-050 LONG LEAD	CRL	1500-00-5001	1
C40 C53 C64 C80 C93	CAP,CER,5PF,1KV	DD-050	CRL	1500-00-5011	5
C94	CAP,CER,10PF,1KV	DD-100	CRL	1500-01-0011	1
C31	CAP,CER,100PF,1KV	DD-101	CRL	1500-01-0111	1
C18 C21	CAP,CER,.001MF,1KV	DD-102	ARCO	1500-01-0211	2
C85	CAP,CER,.01MF,50V	CK-103 LONG LEAD	CRL	1500-01-0300	1
C10 C102 C104 C25 C28 C29 C34 C36 C41 C46 C47 C52 C55 C57 C60 C61 C62 C63 C66 C68 C69 C70 C72 C76 C78 C79 C81 C82 C87 C9 C91 C95	CAP,CER,.01MF,50V	CK-103	CRL	1500-01-0310	32
C48	CAP,CER,.1MF,10V	UK10-104 LONG LEAD	CRL	1500-01-0402	1
L103 C106 C24 C39 C43	CAP,CER,.1MF,20V	UK20-104LL	ARCO	1500-01-0403	5
C83 C84	CAP,CER,.1MF,50V	CK-104	CRL	1500-01-0410	2
C27 C5 C89	CAP,CER,.1MF,10V	UK10-104	CRL	1500-01-0412	3

WAVETEK PARTS LIST	TITLE MAIN	ASSEMBLY NO. 1100-00-0085 PAGE: 1	REV R

REFERENCE DESIGNATIONS	PART DESCRIPTION	ORIG-MFGR-PART-NO	MFGR	WAVETEK NO.	QTY/PT
C12	CAP,POLYC,.1MF,100V	PA2B104F	ELCUB	1500-41-0404	1
C13	CAP,POLYC,1MF,100V	210-81C-105F	IMH	1500-41-0504	1
C14 C15	CAP,POLYC,5MF,100V	C14505F	ELPAC	1500-45-0504	2
C4 C49 C6 C75 C77	VAR1,7-35PF,250V	78-TRIKO-02 7/35 PF	TRIKO	1500-53-5000	5
C35 C98	CAP,TANT,22MF,15V	196D226X9015KA1	SPRAG	1500-72-2A01	2
C71 C73 C86 C88 C90	CAP,TANT,5.6MF,35V	150D565X9035B2	SPRAG	1500-75-6502	5
195	MAIN	154-115	WVTK	1700-00-0085	1
197	SKT,IC,14PIN	14-DIP	CINCH	2100-03-0011	1
J18	CONN,EDGE CARD	252-1A-30-160	CINCH	2100-03-0013	1
NONE	HEAT SINK	NF-207	WAKE	2800-11-0001	2
NONE	TRANSIPAD	10160	MFTRG	2800-11-0004	2
198	HEATSINK NUT	11038	THERM	2800-11-0005	2
199	HEATSINK BODY	11038	THERM	2800-11-0006	2
L1 L2	FERRITE BEAD	56-590-65/3B	FERRX	3100-00-0001	2
K1 K12 K13 K14 K15 K2 K3 K4 K5	RELAY,REED,FORM-A	PS-864	PHIPP	4500-00-0004	9
K10 K11 K16 K6 K7 K8 K9	RELAY,REED,FORM-C	PS-865	PHIPP	4500-00-0005	7

WAVETEK PARTS LIST	TITLE MAIN	ASSEMBLY NO. 1100-00-0085 PAGE: 3	REV R

REFERENCE DESIGNATIONS	PART DESCRIPTION	ORIG-MFGR-PART-NO	MFGR	WAVETEK NO.	QTY/PT
R249 R252 R255 R262 R288 R60					
R56 R75 R76 R80 R84	RES,MF,1/8W,1%,10	RN55D-10R0F	TRW	4701-03-1009	5
R40 R48	RES,MF,1/8W,1%,1.1K	RN55D-1101F	TRW	4701-03-1101	2
R24 R28 R46	RES,MF,1/8W,1%,1.21K	RN55D-1211F	TRW	4701-03-1211	3
R111 R231	RES,MF,1/8W,1%,124	RN55D-1240F	TRW	4701-03-1240	2
R55	RES,MF,1/8W,1%,150	RN55D-1500F	TRW	4701-03-1500	1
R152 R168 R273 R285 R295 R44 R97 R98	RES,MF,1/8W,1%,1.5K	RN55D-1501F	TRW	4701-03-1501	8
R155 R293 R294 R297	RES,MF,1/8W,1%,15K	RN55D-1502F	TRW	4701-03-1502	4
R143 R144 R187 R188	RES,MF,1/8W,1%,15	RN55D-15R0F	TRW	4701-03-1509	4
R183 R26 R3 R30	RES,MF,1/8W,1%,1.62K	RN55D-1621F	TRW	4701-03-1621	4
R141 R49	RES,MF,1/8W,1%,1.78K	RN55D-1781F	TRW	4701-03-1781	2
R163	RES,MF,1/8W,1%,18.2K	RN55D-1822F	TRW	4701-03-1822	1
R125 R127 R133 R134 R211 R217 R238 R244 R259	RES,MF,1/8W,1%,2K	RN55D-2001F	TRW	4701-03-2001	9
R212 R218 R239 R245 R260 R267	RES,MF,1/8W,1%,21.5K	RN55D-2152F	TRW	4701-03-2152	6
R1 R12 R159 R164 R19	RES,MF,1/8W,1%,21.5	RN55D-21R5F	TRW	4701-03-2159	9

WAVETEK PARTS LIST	TITLE MAIN	ASSEMBLY NO. 1100-00-0085 PAGE: 5	REV R

REFERENCE DESIGNATIONS	PART DESCRIPTION	ORIG-MFGR-PART-NO	MFGR	WAVETEK NO.	QTY/PT
C1 C105 C54 C58 C59	CAP,CER,.1MF,20V	UK20-104	CRL	1500-01-0413	5
C37	CAP,CER,15PF,1KV	DD-150	ARCO	1500-01-5011	1
C32	CAP,CER,150PF,1KV	DD-151	ARCO	1500-01-5111	1
C101 C3 C44 C45 C96 C97 C98 C99	CAP,CER,22PF,1KV	DD-220	ARCO	1500-02-2011	8
C30	CAP,CER,220PF,1KV	DD-221	ARCO	1500-02-2111	1
C74	CAP,CER,30PF,1KV	DD-300	CRL	1500-03-0001	1
C33	CAP,CER,33PF,1KV	DD-330	ARCO	1500-03-3011	1
C65	CAP,CER,330PF,1KV	DD-331	ARCO	1500-03-3111	1
C97	CAP,CER,47PF,1KV	DD-470	ARCO	1500-04-7011	1
C51	CAP,CER,.005MF,50V	CK-502	CRL	1500-05-0210	1
C29	CAP,CER,68PF,1KV	DD-680	CRL	1500-06-8001	1
C19 C20	CAP,MICA,150PF,500V	DM15-151J	ARCO	1500-11-5100	2
C21	CAP,MICA,30PF,500V	DM15-300J	ARCO	1500-13-0000	1
C81	CAP,MICA,68PF,500V	DM15-680F	ARCO	1500-16-8001	1
C7	CAP,MICA,820PF,300V	DM15-821F	ARCO	1500-18-2101	1
C17 C22	CAP,MICA,91PF,500V	DM15-910J	ARCO	1500-19-1000	2
C11	CAP,POLYC,.01MF,100V	PA2B103F	ELCUB	1500-41-0304	1

WAVETEK PARTS LIST	TITLE MAIN	ASSEMBLY NO. 1100-00-0085 PAGE: 2	REV R

REFERENCE DESIGNATIONS	PART DESCRIPTION	ORIG-MFGR-PART-NO	MFGR	WAVETEK NO.	QTY/PT
R108 R132 R153 R43	POT,TRIM,100	91AR100	BECK	4600-01-0103	4
R54 R57	POT,TRIM,1K	91AR1K	BECK	4600-01-0209	2
R117 R118 R88	POT,TRIM,10K	91AR10K	BECK	4600-01-0315	3
R120 R124	POT,TRIM,100K	91AR100K	BECK	4600-01-0402	2
R2	POT,TRIM,200	91AR200	BECK	4600-02-0101	1
R11 R21 R85 R86	POT,TRIM,500	91AR500	BECK	4600-05-0104	4
R165 R192 R193	RES,C,1/2W,5%,10	RC20GF-100	STKPL	4700-25-0100	3
R184 R190 R194 R195	RES,C,1/2W,5%,27	RC20GF-270	STKPL	4700-25-0270	4
R8 R9 R95 R96	RES,C,1/2W,5%,8.2	RC20GF-8R2	STKPL	4700-25-0829	4
R100 R109 R131 R154 R272 R274 R299 R32 R33 R34 R5 R52 R6 R78 R81 R89	RES,MF,1/8W,1%,100	RN55D-1000F	TRW	4701-03-1000	16
R106 R107 R114 R115	RES,MF,1/8W,1%,1K	RN55D-1001F	TRW	4701-03-1001	4
R113 R116 R13 R135 R136 R140 R142 R174 R176 R179 R18 R265 R266 R280 R283 R287 R298	RES,MF,1/8W,1%,10K	RN55D-1002F	TRW	4701-03-1002	17
R213 R219 R222 R225 R228 R232 R242 R248	RES,MF,1/8W,1%,100K	RN55D-1003F	TRW	4701-03-1003	14

WAVETEK PARTS LIST	TITLE MAIN	ASSEMBLY NO. 1100-00-0085 PAGE: 4	REV R

REFERENCE DESIGNATIONS	PART DESCRIPTION	ORIG-MFGR-PART-NO	MFGR	WAVETEK NO.	QTY/PT
R27 R31 R66 R67					
R170	RES,MF,1/8W,1%,221	RN55D-2210F	TRW	4701-03-2210	1
R147 R157 R167 R263 R264 R279 R292 R301	RES,MF,1/8W,1%,2.21K	RN55D-2211F	TRW	4701-03-2211	8
R286	RES,MF,1/8W,1%,221K	RN55D-2213F	TRW	4701-03-2213	1
R130 R282 R289 R35 R45 R53 R68 R73	RES,MF,1/8W,1%,2.37K	RN55D-2371F	TRW	4701-03-2371	8
R268	RES,MF,1/8W,1%,23.7K	RN55D-2372F	TRW	4701-03-2372	1
R281	RES,MF,1/8W,1%,237K	RN55D-2373F	TRW	4701-03-2373	1
R180 R186 R202 R38 R39 R47 R51	RES,MF,1/8W,1%,249	RN55D-2490F	TRW	4701-03-2490	7
R203 R278 R59 R90	RES,MF,1/8W,1%,2.49K	RN55D-2491F	TRW	4701-03-2491	4
R204	RES,MF,1/8W,1%,24.9K	RN55D-2492F	TRW	4701-03-2492	1
R110 R112 R119 R84	RES,MF,1/8W,1%,274	RN55D-2740F	TRW	4701-03-2740	4
R214 R215 R220 R221 R240 R241 R246 R247 R261	RES,MF,1/8W,1%,27.4K	RN55D-2742F	TRW	4701-03-2742	9
R104 R156 R162	RES,MF,1/8W,1%,2.87K	RN55D-2871F	TRW	4701-03-2871	3
R150 R166 R178	RES,MF,1/8W,1%,3.01K	RN55D-3011F	TRW	4701-03-3011	3
R15 R16 R182 R22 R23	RES,MF,1/8W,1%,316	RN55D-3160F	TRW	4701-03-3160	6

WAVETEK PARTS LIST	TITLE MAIN	ASSEMBLY NO. 1100-00-0085 PAGE: 6	REV R

NOTE: UNLESS OTHERWISE SPECIFIED

REMOVE ALL BURRS AND BREAK SHARP EDGES	DRAWN	DATE	WAVETEK SAN DIEGO • CALIFORNIA
MATERIAL	PROJENGR		TITLE PARTS LIST MAIN BOARD
	RELEASE APPROV		
FINISH WAVETEK PROCESS	TOLERANCE UNLESS OTHERWISE SPECIFIED XXX ±.010 ANGLES ±1° XX ±.030		
	DO NOT SCALE DWG		MODEL NO. 154 / DWG NO. 1100-00-0085 / REV R
	SCALE		CODE IDENT 23338 / SHEET 1 OF 2

THIS DOCUMENT CONTAINS PROPRIETARY INFORMATION AND DESIGN RIGHTS BELONGING TO WAVETEK AND MAY NOT BE REPRODUCED FOR ANY REASON EXCEPT CALIBRATION, OPERATION, AND MAINTENANCE WITHOUT WRITTEN AUTHORIZATION.

REV	ECN	BY	DATE	APP

REFERENCE DESIGNATORS	PART DESCRIPTION	ORIG-MFGR-PART-NO	MFGR	WAVETEK NO.	QTY/PT
R91					
R122 R158 R4	RES,MF,1/8W,1%,3.32K	RN55D-3321F	TRW	4701-03-3321	3
R223 R224 R226 R227 R229 R230 R233 R234 R250 R251 R253 R254 R256 R257	RES,MF,1/8W,1%,33.2K	RN55D-3322F	TRW	4701-03-3322	14
R300 R58 R78 R77	RES,MF,1/8W,1%,33.2	RN55D-33R2F	TRW	4701-03-3329	4
R10 R20	RES,MF,1/8W,1%,3.65K	RN55D-3651F	TRW	4701-03-3651	2
R246	RES,MF,1/8W,1%,3.83K	RN55D-3831F	TRW	4701-03-3831	1
R138 R175	RES,MF,1/8W,1%,38.3K	RN55D-3832F	TRW	4701-03-3832	2
R103	RES,MF,1/8W,1%,392	RN55D-3920F	TRW	4701-03-3920	1
R105 R161 R7	RES,MF,1/8W,1%,3.92K	RN55D-3921F	TRW	4701-03-3921	3
R137 R139 R173 R177	RES,MF,1/8W,1%,4.02K	RN55D-4021F	TRW	4701-03-4021	4
R241	RES,MF,1/8W,1%,4.32K	RN55D-4321F	TRW	4701-03-4321	1
R70 R79	RES,MF,1/8W,1%,464	RN55D-4640F	TRW	4701-03-4640	2
R101 R102	RES,MF,1.8W,1%,46.4	RN55D-46R4F	TRW	4701-03-4649	2
R146 R271	RES,MF,1/8W,1%,4.75K	RN55D-4751F	TRW	4701-03-4751	2
R121 R235 R276 R284 R298	RES,MF,1/8W,1%,47.5K	RN55D-4752F	TRW	4701-03-4752	5
R145 R148 R21	RES,MF,1/8,1%,499	RN55D-4990F	TRW	4701-03-4990	3

WAVETEK PARTS LIST | TITLE MAIN | ASSEMBLY NO. 1100-00-0085 | PAGE: 7 | REV R

REFERENCE DESIGNATORS	PART DESCRIPTION	ORIG-MFGR-PART-NO	MFGR	WAVETEK NO.	QTY/PT
R37 R50	RES,MF,1/8W,1%,90.9	RN55D-90R9F	TRW	4701-03-9099	2
R36	RES,MF,1/4W,1%,196	RN60D-1960F	TRW	4701-13-1960	1
R49	RES,MF,1/4W,1%,332	RN60D-3320F	TRW	4701-13-3320	1
R196 R197 R198 R199 R209	RES,MF,1/4W,1%,49.9	RN60D-49R9F	TRW	4701-13-4999	5
R201 R206	RES,MF,1/4W,1%,71.5	RN60D-71R5F	TRW	4701-13-7159	2
R141 R171	RES,SET,2-10K,1/8W QTY:2:4701-03-1002	142-501-64	WVTK	4789-00-0018	1
CR13 CR2 CR83	DIODE,ZENER 6.2V	1N823A	NPC	4801-01-0823	3
CR18 CR20	DIODE	1N3716	GE	4802-01-3716	2
CR10 CR14 CR15 CR16 CR17 CR25 CR26 CR27 CR28 CR34 CR9	DIODE	FD-777	FAIR	4807-02-0777	11
CR1 CR19 CR21 CR22 CR23 CR24 CR29 CR3 CR30 CR31 CR32 CR33 CR35 CR36 CR37 CR38 CR39 CR4 CR40 CR41 CR42 CR43 CR44 CR45 CR46 CR47 CR48 CR49 CR5 CR50 CR51 CR52 CR53 CR54 CR55 CR56 CR57 CR58 CR59 CR6 CR60 CR61 CR62 CR63	DIODE	FD-6666	FAIR	4807-02-6666	75

WAVETEK PARTS LIST | TITLE MAIN | ASSEMBLY NO. 1100-00-0085 | PAGE: 9 | REV R

REFERENCE DESIGNATORS	PART DESCRIPTION	ORIG-MFGR-PART-NO	MFGR	WAVETEK NO.	QTY/PT
Q22 Q24 Q7 Q8					
Q83	TRANS	2N5486	MOT	4901-05-4860	1
Q10 Q11 Q14 Q28 Q29 Q9	TRANS	MPS-L0F	FAIR	4902-00-0080	6
Q44 Q45	TRANS,SEL,2N2219A QTY:1:4901-02-2191	142-501-66	WVTK	4998-00-0001	2
Q15 Q16 Q31 Q32	TRANS,M/PR,2N3563 QTY:2:4901-03-5630	142-501-52	WVTK	4998-00-0004	2
Q82	TRANS,SEL,2N5962 QTY:1:4901-05-4620	142-501-55	WVTK	4998-00-0008	1
Q2 Q3	TRANS,M/PR,2N5085 QTY:2:4901-05-4850	142-501-53	WVTK	4998-00-0009	1
174	SWITCH ASSY FB	154-004	WVTK	5103-00-0007	1
NONE	BUTTON	J-52305-BLACK	CRL	5103-04-0003	7
U38	IC	AD 812	ANDEV	7000-0E-1200	1
IC2	IC	MC1595L	MOT	7000-15-9500	1
IC3	IC	CA-3028A	RCA	7000-30-2800	1
IC1	IC	CA-3049	RCA	7000-30-4900	1

WAVETEK PARTS LIST | TITLE MAIN | ASSEMBLY NO. 1100-00-0085 | PAGE: 11 | REV R

REFERENCE DESIGNATORS	PART DESCRIPTION	ORIG-MFGR-PART-NO	MFGR	WAVETEK NO.	QTY/PT
R185	RES,MF,1/8W,1%,4.99K	RN55D-4991F	TRW	4701-03-4991	1
R82 R85 R61 R65	RES,MF,1/8W,1%,511	RN55D-5110F	TRW	4701-03-5110	4
R208	RES,MF,1/8W,1%,51.1	RN55D-51R1F	TRW	4701-03-5119	1
R200 R205	RES,MF,1/8W,1%,54.9	RN55D-54R9F	TRW	4701-03-5499	2
R126 R69 R71 R72	RES,MF,1/8W,1%,56.2	RN55D-56R2F	TRW	4701-03-5629	4
R181 R184	RES,MF,1/8W,1%,576	RN55D-5760F	TRW	4701-03-5760	2
R291	RES,MF,1/8W,1%,5.76K	RN55D-5761F	TRW	4701-03-5761	1
R25 R29	RES,MF,1/8W,1%,6.19K	RN55D-6191F	TRW	4701-03-6191	2
R169 R207	RES,MF,1/8W,1%,61.9	RN55D-61R9F	TRW	4701-03-6199	2
R149	RES,MF,1/8W,1%,6.81K	RN55D-6811F	TRW	4701-03-6811	1
R128 R129	RES,MF,1/8W,1%,6.98K	RN55D-6981F	TRW	4701-03-6981	2
R151	RES,MF,1/8W,1%,69.8K	RN55D-6982F	TRW	4701-03-6982	1
R18 R17	RES,MF,1/8W,1%,7.5K	RN55D-7501F	TRW	4701-03-7501	2
R269 R270 R275 R277 R62	RES,MF,1/8W,1%,825	RN55D-8250F	TRW	4701-03-8250	5
R123 R160 R172 R63 R82 R83 R92	RES,MF,1/8W,1%,8.25K	RN55D-8251F	TRW	4701-03-8251	7
R302	RES,MF,1/8W,1%,82.5	RN55D-82R5F	TRW	4701-03-8259	1

WAVETEK PARTS LIST | TITLE MAIN | ASSEMBLY NO. 1100-00-0085 | PAGE: 8 | REV R

REFERENCE DESIGNATORS	PART DESCRIPTION	ORIG-MFGR-PART-NO	MFGR	WAVETEK NO.	QTY/PT
CR64 CR65 CR66 CR67 CR68 CR69 CR7 CR70 CR71 CR72 CR73 CR74 CR75 CR76 CR77 CR78 CR79 CR8 CR81 CR82 CR84 CR85 CR86 CR87 CR88 CR89 CR90 CR91 CR92 CR93 CR94					
CR11 CR12	DIODE,SET,2-FD-777 QTY:2:4807-02-0777	142-501-58	WVTK	4898-00-0003	1
Q76 Q77	TRANS	2N2369A	MOT	4901-02-3691	2
Q43 Q46	TRANS	2N2905A	NSC	4901-02-9051	2
Q41 Q5	TRANS	2N3563	FAIR	4901-03-5630	2
Q33 Q35 Q37 Q39 Q47 Q48 Q49 Q50 Q51 Q52 Q53 Q54 Q58 Q59 Q60 Q61 Q62 Q63 Q64 Q65 Q66 Q68 Q69 Q79 Q81	TRANS	2N3638A	CAHTR	4901-03-6381	25
Q1 Q42 Q70 Q71	TRANS	2N3640	FAIR	4901-03-6400	4
Q34 Q36 Q40 Q55 Q56 Q57 Q67	TRANS	2N3643	FAIR	4901-03-6430	7
Q19 Q21 Q23 Q25 Q26 Q27 Q30 Q4 Q6 Q72 Q73 Q74 Q75 Q78 Q80	TRANS	2N3646	NSC	4901-03-6460	15
Q12 Q13 Q17 Q18 Q20	TRANS	2N5139	FAIR	4901-05-1390	9

WAVETEK PARTS LIST | TITLE MAIN | ASSEMBLY NO. 1100-00-0085 | PAGE: 10 | REV R

NOTE: UNLESS OTHERWISE SPECIFIED

REMOVE ALL BURRS AND BREAK SHARP EDGES	DRAWN	DATE	WAVETEK SAN DIEGO • CALIFORNIA
MATERIAL	PROJ ENGR		TITLE: PARTS LIST MAIN BOARD
	RELEASE APPROV		
FINISH WAVETEK PROCESS	TOLERANCE UNLESS OTHERWISE SPECIFIED .XXX ±.010 ANGLES ±1° .XX ±.030		
	DO NOT SCALE DWG		MODEL NO. 154 / DWG NO. 1100-00-0085 / REV R
	SCALE		CODE IDENT 23338 / SHEET 2 OF 2

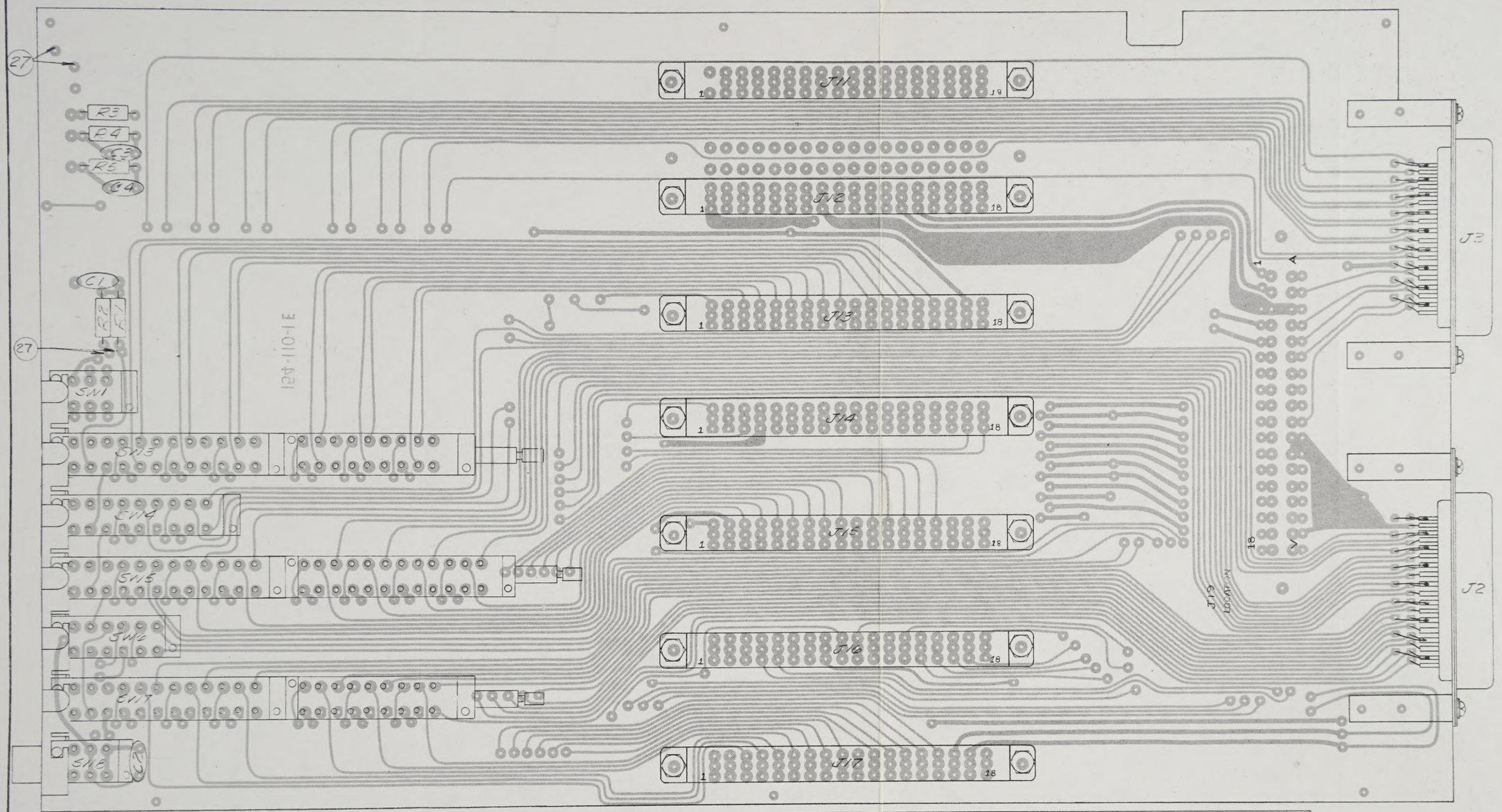

PARTS LIST

ITEM	REF DES	DESCRIPTION	MFGR	MFGR NO	QTY
1		CAPACITORS			
2	C3, C4	CERAMIC DISC, 1000V, 33pF	CRL	DD330	2
3	C2	50V, .01μF		CK103	1
4	C1	20V, .1μF		UK20-104	1
5					
6		RESISTORS			
7	R2	CARBON, 1/2W, 10%, 3.9K	STACKPOLE	RC20GF392K	1
8	R1	10K		103K	1
9					
10	R3-R5	METAL FILM, 1/4W, 1%, 3.32K	CORNING	RN60D	3
11					
12					
13					
14	SW1, SW3-SW8	SWITCH ASSY	WAVETEK	B154-405	1
15					
16					

PARTS LIST

ITEM	REF DES	DESCRIPTION	MFGR	MFGR NO.	QTY
17	J11-J17	CONNECTORS	[illegible]	252-18-30-160	7
18	J2, J3		AMPHENOL	57-40360	2
19					
20					
21					
22					
23		CONNECTOR BLOCKS	WAVETEK	A154-306	4
24					
25					
26		CIRCUIT BOARD	WAVETEK	154-110E	1
27					2
28					
29					
30					
31					
32					
33					

rev	ecn	by	date	app.
F	ECN 1095	B	9-16-74	
E	ECN 894	[illegible]	6-14-74	
D	ECN 528	[illegible]	12-15-71	
C	ECN 476	B	9/27/72	
B	ECN 435	[illegible]	9/27/72	
A	ECN 417	[illegible]	9/27/72	

tolerance unless otherwise specified .XXX ± .010 .XX ± .030

WAVETEK san diego, calif

scale 2/1

by GRAY date 10-21-71 app. [illegible]

material N/A

title ASSY, MOTHER BOARD

model no. 154 dwg no. D154-010 rev F

finish N/A

this document contains proprietary information and design rights belonging to WAVETEK and may not be used or reproduced for any reason except calibration, operation and maintenance without written authorization.

THIS DOCUMENT CONTAINS PROPRIETARY INFORMATION AND DESIGN RIGHTS BELONGING TO WAVETEK AND MAY NOT BE REPRODUCED FOR ANY REASON EXCEPT CALIBRATION, OPERATION, AND MAINTENANCE WITHOUT WRITTEN AUTHORIZATION.

REV	ECN	BY	DATE	APP

REFERENCE DESIGNATORS	PART DESCRIPTION	ORIG-MFGR-PART-NO	MFGR	WAVETEK NO.	QTY/PT
NONE	SCHEMATIC,INSTRUMENT	0004-00-0041	WVTK	0004-00-0041	1
NONE	ASSY DRWG, MOTHER	0101-00-0080	WVTK	0101-00-0080	1
23	BLOCK,CONN	154-306	WVTK	1400-00-2873	4
C2	CAP,CER,.01MF,50V	CK-103	CRL	1500-01-0310	1
C1	CAP,CER,.1MF,20V	UK20-104	CRL	1500-01-0413	1
C3 C4	CAP,CER,33PF,1KV	UD-330	ARCO	1500-03-3011	2
NONE	MOTHER	154-110	WVTK	1700-00-0080	1
J2 J3	CONN	57-40360	AMPH	2100-02-0040	2
J11 J12 J13 J14 J15 J16 J17	CONN,EDGE CARD	252-18-30-160	CINCH	2100-03-0013	7
27	LAMP	CM7-7876	CHMIN	2400-02-0013	2
R1	RES,MF,1/8W,1%,10K	RN55D-1002F	TRW	4701-03-1002	1
R3 R4 R5	RES,MF,1/8W,1%,3.32K	RN55D-3321F	TRW	4701-03-3321	3
R2	RES,MF,1/8W,1%,3.92K	RN55D-3921F	TRW	4701-03-3921	1
14	SWITCH ASSY PB	154-405	WVTK	5103-00-0008	1
15	BUTTON	J-52305-BLACK	CRL	5103-04-0003	7

WAVETEK PARTS LIST	TITLE MOTHER	ASSEMBLY NO. 1100-00-0080 PAGE: 1	REV F

NOTE: UNLESS OTHERWISE SPECIFIED

REMOVE ALL BURRS AND BREAK SHARP EDGES	DRAWN	DATE	WAVETEK SAN DIEGO • CALIFORNIA
MATERIAL	PROJ ENGR		TITLE MOTHER BOARD
	RELEASE APPROV		
FINISH WAVETEK PROCESS	TOLERANCE UNLESS OTHERWISE SPECIFIED .XXX ±.010 .XX ±.030 ANGLES ±1		
	DO NOT SCALE DWG		MODEL NO. 154 / DWG NO. 1100-00-0080 / REV F
	SCALE		CODE IDENT 23338 / SHEET OF

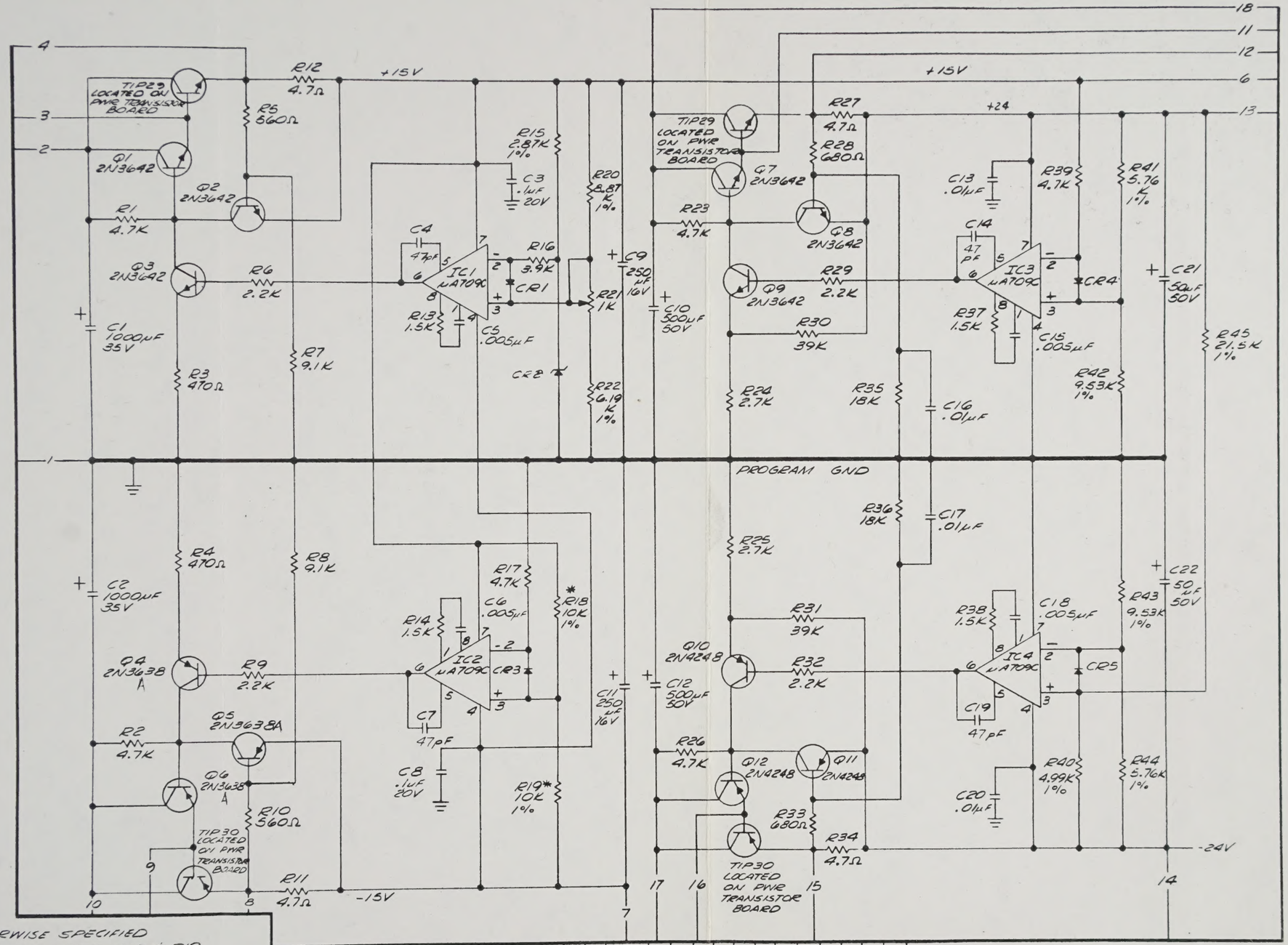

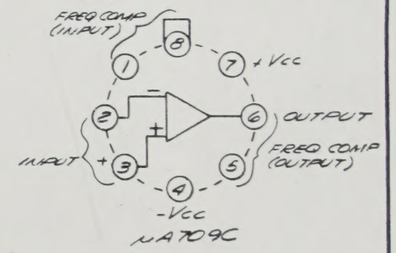

NOTES: UNLESS OTHERWISE SPECIFIED
1. * INDICATES MATCHED PAIR, R18 & R19
2. RESISTORS ARE CARBON, 1/8W, 1%
3. DIODES ARE FD6666

LAST REF DESIG
R45 IC4
C22 Q12
CR5

rev	ecn	by	date	app.
D	ECN 1857	Swift	11-29-78	
C	ECN 1599	D	8/31/77	
B	ECN 1381	RD	1-7-76	
A	ECN 435	SCH	4/6/73	

tolerance unless otherwise specified .XXX ± .010 .XX ± .030

WAVETEK san diego, calif

scale N/A | by GRAY | date 5-26-71 | app.

material N/A

finish N/A

title SCHEMATIC, 15V, 24V POWER SUPPLY

model no. 154 | dwg no 0103-00-0081 | rev D

this document contains proprietary information and design rights belonging to WAVETEK and may not be used or reproduced for any reason except calibration, operation and maintenance without written authorization.

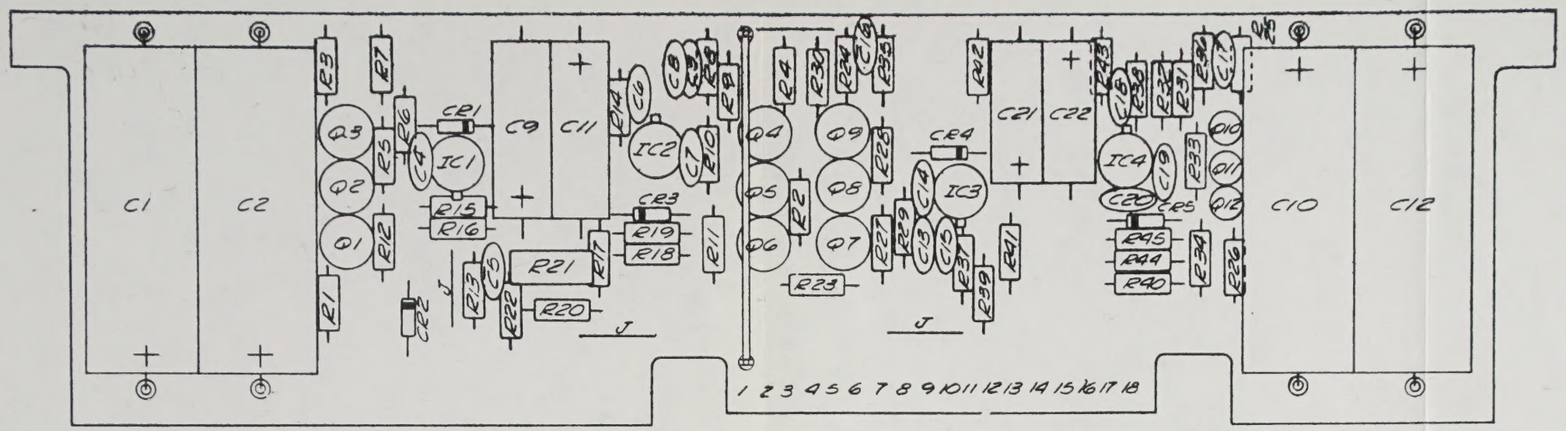

NOTE: R5 & R10;
WHEN USING 1/8 WATT RESISTORS
THESE VALUES SHOULD BE 681Ω

rev	ecn	by	date	app.
C	ECN 1857	PVB	12/4/78	
B	ECN 1381	RO	1-7-76	K. [illegible]
A	477	B.	9/8/72	

tolerance unless otherwise specified
.XXX ± .010
.XX ± .030

WAVETEK san diego, calif

scale 2/1

by GEAY | date 6-22-71 | app. [illegible]

material N/A

title ASSEMBLY, 15V, 24V POWER SUPPLY

model no. 154 | dwg no 0101-00-0081 | rev C

finish N/A

this document contains proprietary information and design rights belonging to WAVETEK and may not be used or reproduced for any reason except calibration, operation and maintenance without written authorization.

THIS DOCUMENT CONTAINS PROPRIETARY INFORMATION AND DESIGN RIGHTS BELONGING TO WAVETEK AND MAY NOT BE REPRODUCED FOR ANY REASON EXCEPT CALIBRATION, OPERATION, AND MAINTENANCE WITHOUT WRITTEN AUTHORIZATION.

REV	ECN	BY	DATE	APP

REFERENCE DESIGNATORS	PART DESCRIPTION	ORIG-MFGR-PART-NO	MFGR	WAVETEK NO.	QTY/PI
NONE	ASSY DRWG,POWER	0101-00-0081	WVTK	0101-00-0081	1
NONE	SCHEMATIC,POWER	0103-00-0081	WVTK	0103-00-0081	1
C13 C16 C17 C20	CAP,CER,.01MF,50V	CK-103	CRL	1500-01-0310	4
C3 C8	CAP,CER,.1MF,20V	UK20-104	CRL	1500-01-0413	2
C14 C19 C4 C7	CAP,CER,47PF,1KV	DD-470	ARCO	1500-04-7011	4
C15 C18 C5 C6	CAP,CER,.005MF,50V	CK-502	CRL	1500-05-0210	4
C1 C2	CAP,ELECT,1000MF,35V	39D108G035GL6	SPRAG	1500-31-0212	2
C11 C9	CAP,ELECT,250MF,16V	500D257G016DF7	SPRAG	1500-32-5101	2
C21 C22	CAP,ELECT,50MF,50V	500D506G050DD7	SPRAG	1500-35-0003	2
C10 C12	CAP,ELECT,500MF,50V	39D5076G050GL4	SPRAG	1500-35-0103	2
NONE	POWER	154-111	WVTK	1700-00-0081	1
NONE	TRANSIPAD	10123N	METRS	2800-11-0003	9
R21	POT,TRIM,1K	91A1K	HECK	4600-01-0209	1
R11 R12 R27 R34	RES,C,1/2W,5%,4.7	RC20GF-4R7	STKPL	4700-25-0479	4
R13 R14 R37 R38	RES,MF,1/8W,1%,1.5K	RN55D-1501F	TRW	4701-03-1501	4
R35 R36	RES,MF,1/8W,1%,18.2K	RN55D-1822F	TRW	4701-03-1822	2
R45	RES,MF,1/8W,1%,21.5K	RN55D-2152F	TRW	4701-03-2152	1
R29 R32 R6 R9	RES,MF,1/8W,1%,2.21K	RN55D-2211F	TRW	4701-03-2211	4

WAVETEK PARTS LIST	TITLE 15V POWER	ASSEMBLY NO. 1100-00-0081 PAGE: 1	REV D

REFERENCE DESIGNATORS	PART DESCRIPTION	ORIG-MFGR-PART-NO	MFGR	WAVETEK NO.	QTY/PI
Q10 Q11 Q12	TRANS	2N4248	FAIR	4901-04-2480	3
IC1 IC2 IC3 IC4	IC,CLASS II,MA-709 QTY:1:7000-07-0900	130-501-14	WVTK	7200-00-0008	4

WAVETEK PARTS LIST	TITLE 15V POWER	ASSEMBLY NO. 1100-00-0081 PAGE: 3	REV D

REFERENCE DESIGNATORS	PART DESCRIPTION	ORIG-MFGR-PART-NO	MFGR	WAVETEK NO.	QTY/PI
R15 R24 R25	RES,MF,1/8W,1%,2.87K	RN55D-2871F	TRW	4701-03-2871	3
R16	RES,MF,1/8W,1%,3.83K	RN55D-3831F	TRW	4701-03-3831	1
R30 R31	RES,MF,1/8W,1%,38.3K	RN55D-3832F	TRW	4701-03-3832	2
R3 R4	RES,MF,1/8W,1%,464	RN55D-4640F	TRW	4701-03-4640	2
R1 R17 R2 R23 R26 R39	RES,MF,1/8W,1%,4.75K	RN55D-4751F	TRW	4701-03-4751	6
R40	RES,MF,1/8W,1%,4.99K	RN55D-4991F	TRW	4701-03-4991	1
R41 R44	RES,MF,1/8W,1%,5.76K	RN55D-5761F	TRW	4701-03-5761	2
R22	RES,MF,1/8W,1%,6.19K	RN55D-6191F	TRW	4701-03-6191	1
R10 R28 R33 R5	RES,MF,1/8W,1%,681	RN55D-6810F	TRW	4701-03-6810	4
R20	RES,MF,1/8W,1%,8.87K	RN55D-8871F	TRW	4701-03-8871	1
R7 R8	RES,MF,1/8W,1%,9.09K	RN55D-9091F	TRW	4701-03-9091	2
R42 R43	RES,MF,1/8W,1%,9.53K	RN55D-9531F	TRW	4701-03-9531	2
R18 R19	RES,SET,2-10K,1/8W QTY:2:4701-03-1002	142-501-64	WVTK	4789-00-0018	1
CR2	DIODE	1N4581	MICRO	4801-01-4581	1
CR1 CR3 CR4 CR5	DIODE	FD-6666	FAIR	4807-02-6666	4
Q4 Q5 Q6	TRANS	2N3638A	CARTH	4901-03-8381	3
Q1 Q2 Q3 Q7 Q8 Q9	TRANS	2N3642	FAIR	4901-03-6420	6

WAVETEK PARTS LIST	TITLE 15V POWER	ASSEMBLY NO. 1100-00-0081 PAGE: 2	REV D

NOTE: UNLESS OTHERWISE SPECIFIED

REMOVE ALL BURRS AND BREAK SHARP EDGES	DRAWN	DATE	WAVETEK SAN DIEGO • CALIFORNIA
MATERIAL	PROJ ENGR		TITLE 15V, 24V POWER SUPPLY
	RELEASE APPROV		
FINISH WAVETEK PROCESS	TOLERANCE UNLESS OTHERWISE SPECIFIED XXX ±.010 ANGLES ±1 XX ±.030		
	DO NOT SCALE DWG		MODEL NO. 154 / DWG NO. 1100-00-0081 / REV D
	SCALE		CODE IDENT 23338 / SHEET OF

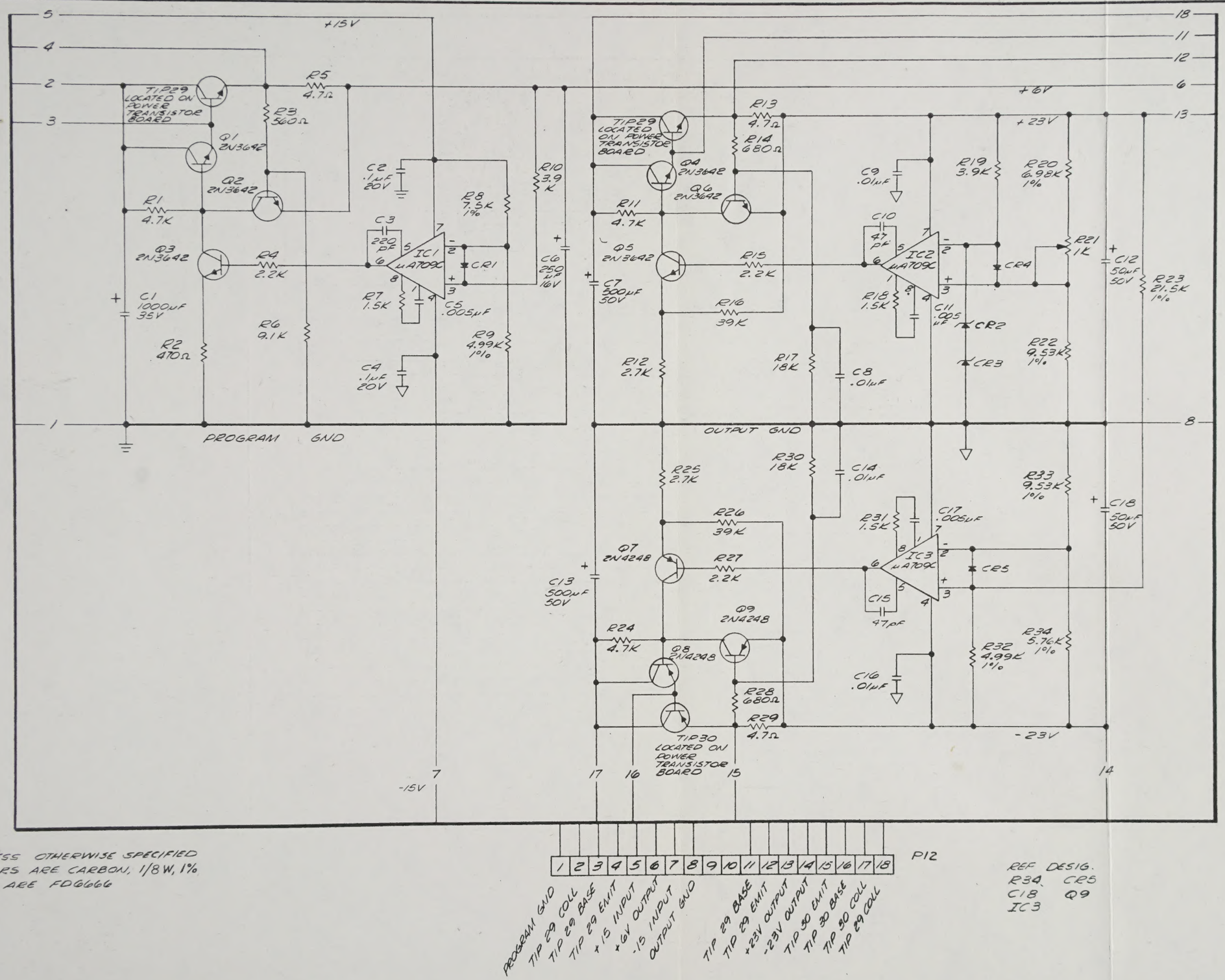

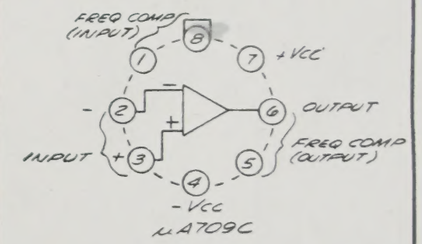

NOTES: UNLESS OTHERWISE SPECIFIED
1. RESISTORS ARE CARBON, 1/8 W, 1%
2. DIODES ARE FD6666

REF DESIG.
R34 CR5
C18 Q9
IC3

rev	ecn	by	date	app.
C	ECN 1599	D	8/21/72	
B	ECN 1381	RO	1-7-76	KJ
A	ECN 435	[illegible]	4/21/72	

tolerance unless otherwise specified .XXX ± .010 .XX ± .030

WAVETEK san diego, calif

scale N/A | by GRAY | date 5-28-71 | app. K.S.F.

material N/A

title SCHEMATIC 6V, 23V POWER SUPPLY

model no. 154 | dwg no. 0103-00-0089 | rev C

finish N/A

this document contains proprietary information and design rights belonging to WAVETEK and may not be used or reproduced for any reason except calibration, operation and maintenance without written authorization.

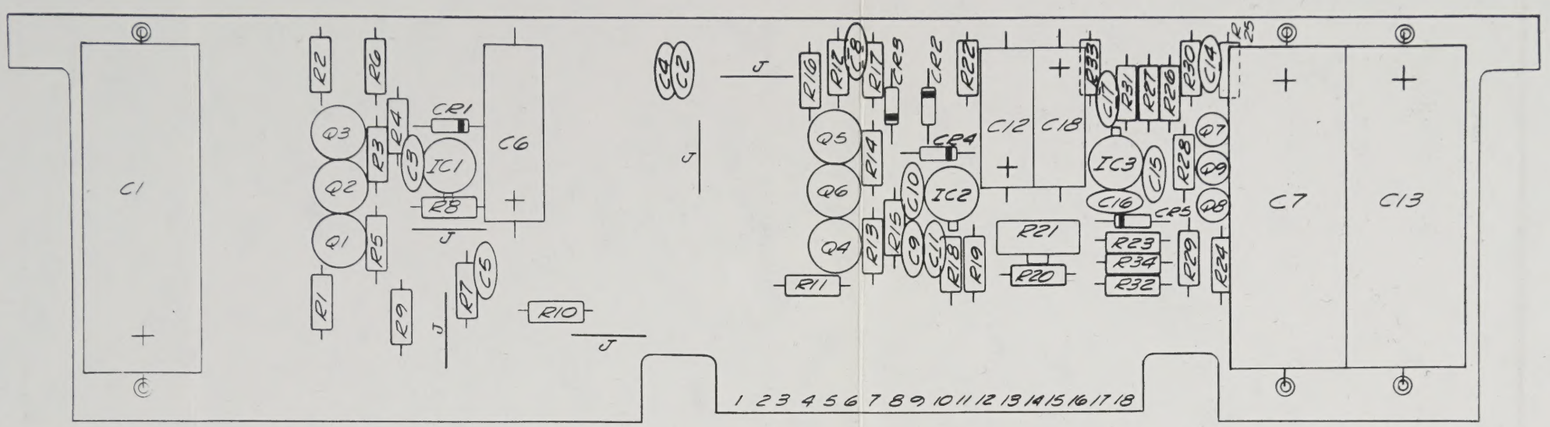

PARTS LIST

ITEM	REF DES	DESCRIPTION	MFGR	MFGR NO.	QTY
1		CAPACITORS			
2	C3	CERAMIC, 1000V, 10%, 220pf	CRL	DD221	1
3	C5, C11, C17	50V, .005μF		CK-502	3
4	C8, C9, C14, C16	50V .01μF		CK-103	4
5	C2, C4	20V .1μF		UK20-104	2
6	C12, C18	ELECTROLYTIC, 50V, 10%, 50μF	SPRAGUE	500D506G050DD2	2
7	C6	16V, 250μF		500D257B016DF7	1
8	C7, C13	50V 500μF		39D507G050GL4	2
9	C1	35V 1000μF		39D108G035GL4	1
10	C10, C15	CERAMIC 1000V, 10% 47pf	CRL	DD470	2
11					
12					
13		DIODES			
14	CR1, CR4, CR5	FD6666	FAIRCHILD	FD6666	3
15	CR2, CR3	ZENER	WAVETEK	130-506	2
16					
17					
18					
19		INTEGRATED CIRCUITS			
20	IC1-IC3	-14	FAIRCHILD	μA709C	3
21					
22					
23	R21	POTENTIOMETERS 1K	CRL	BA1603-803	1
24					
25					
26		RESISTORS			
27	R5, R13, R29	CARBON, 1/2W, 5%, 9.7Ω	STACKPOLE	RC20GF9R70	3
28	R2	10% 470Ω		471K	1
29	R3	560Ω		561K	1
30	R14, R28	680Ω		681K	2
31	R7, R18 R31	1.5K		152K	3
32	R4, R15, R27	2.2K		222K	3
33	R12, R25	2.7K		272K	2
34	R10, R19	3.9K		392K	2
35	R1, R11, R24	5% 4.7K		472J	3
36	R6	9.1K		912J	1
37	R17, R30	18K		183J	2
38	R16, R26	10% 39K		393K	2
39					
40					
41					
42					
43					

PARTS LIST

ITEM	REF DES	DESCRIPTION	MFGR	MFGR NO.	QTY
44		RESISTORS			
45	R9, R32	METAL FILM, 1/4W, 1%, 9.99K	CORNING	RN60D	2
46	R34	5.76K			1
47	R20	6.98K			1
48	R8	7.5K			1
49	R22, R33	9.53K			2
50	R23	21.5K			1
51					
52					
53					
54		TRANSISTORS			
55	Q1-Q6	2N3642	FAIRCHILD	2N3642	6
56	Q7-Q9	2N4248		2N4248	3
57					
58					
59					
60					
61		CIRCUIT BOARD	WAVETEK	154-111B	1
62					
63					
64					
65					
66					
67					

	A	ECN 1381	ED	4-7-71	
tolerance unless otherwise specified XXX ± 0.0 XX ± 0.30	rev	ecn	by	date	app
	WAVETEK san diego, calif				
scale 2/1	by GEAY	date 6-21-71	app		
material N/A	title ASSEMBLY 6V, 23V POWER SUPPLY				
finish N/A	model no. 154	dwg no. 0154-021	rev A		

this document contains proprietary information and design rights belonging to WAVETEK and may not be used or reproduced for any reason except calibration, operation and maintenance without written authorization

THIS DOCUMENT CONTAINS PROPRIETARY INFORMATION AND DESIGN RIGHTS BELONGING TO WAVETEK AND MAY NOT BE REPRODUCED FOR ANY REASON EXCEPT CALIBRATION, OPERATION, AND MAINTENANCE WITHOUT WRITTEN AUTHORIZATION.

REV	ECN	BY	DATE	APP

REFERENCE DESIGNATORS	PART DESCRIPTION	ORIG-MFGR-PART-NO	MFGR	WAVETEK NO.	QTY/PT
NONE	ASSY DRWG, POWER	0101-00-0089	WVTK	0101-00-0089	1
NONE	SCHEMATIC, POWER	0103-00-0089	WVTK	0103-00-0089	1
C14 C16 C8 C9	CAP,CER,.01MF,50V	CK-103	CRL	1500-01-0310	4
C2 C4	CAP,CER,.1MF,20V	UK20-104	AMCO	1500-01-0413	2
C3	CAP,CER,220PF,1KV	DD-221	CRL	1500-02-2111	1
C10 C15	CAP,CER,47PF,1KV	DD-470	CRL	1500-04-7011	2
C11 C17 C5	CAP,CER,.005MF,50V	CK-502	CRL	1500-05-0210	3
C1	CAP,ELECT,1000MF,35V	39D108G035GL6	SPRAG	1500-31-0212	1
C6	CAP,ELECT,250MF,16V	500D257G016DF7	SPRAG	1500-32-5101	1
C12 C18	CAP,ELECT,50MF,50V	500D506G050DD7	SPRAG	1500-35-0003	2
C13 C7	CAP,ELECT,500MF,50V	39D507G050GL4	SPRAG	1500-35-0103	2
NONE	POWER	154-111	WVTK	1700-00-0081	1
R21	POT,TRIM,1K	91AR1K	HECK	4600-01-0209	1
R13 R29 R5	RES,C,1/2W,5%,4.7	RC20GF-4R7	STKPL	4700-25-0479	3
R18 R31 R7	RES,MF,1/8W,1%,1.5K	RN55D-1501F	TRW	4701-03-1501	3
R17 R30	RES,MF,1/8W,1%,18.2K	RN55D-1822F	TRW	4701-03-1822	2
R23	RES,MF,1/8W,1%,21.5K	RN55D-2152F	TRW	4701-03-2152	1
R15 R27 R4	RES,MF,1/8W,1%,2.21K	RN55D-2211F	TRW	4701-03-2211	3

WAVETEK PARTS LIST	TITLE 6V POWER	ASSEMBLY NO. 1100-00-0089 PAGE: 1	REV A

REFERENCE DESIGNATORS	PART DESCRIPTION	ORIG-MFGR-PART-NO	MFGR	WAVETEK NO.	QTY/PT
R12 R25	RES,MF,1/8W,1%,2.87K	RN55D-2871F	TRW	4701-03-2871	2
R16 R26	RES,MF,1/8W,1%,38.3K	RN55D-3832F	TRW	4701-03-3832	2
R10 R19	RES,MF,1/8W,1%,3.92K	RN55D-3921F	TRW	4701-03-3921	2
R2	RES,MF,1/8W,1%,464	RN55D-4640F	TRW	4701-03-4640	1
R1 R11 R24	RES,MF,1/8W,1%,4.75K	RN55D-4751F	TRW	4701-03-4751	3
R32 R9	RES,MF,1/8W,1%,4.99K	RN55D-4991F	TRW	4701-03-4991	2
R3	RES,MF,1/8W,1%,576	RN55D-5760F	TRW	4701-03-5760	1
R34	RES,MF,1/8W,1%,5.76K	RN55D-5761F	TRW	4701-03-5761	1
R14 R28	RES,MF,1/8W,1%,681	RN55D-6810F	TRW	4701-03-6810	2
R20	RES,MF,1/8W,1%,6.98K	RN55D-6981F	TRW	4701-03-6981	1
R8	RES,MF,1/8W,1%,7.5K	RN55D-7501F	TRW	4701-03-7501	1
R6	RES,MF,1/8W,1%,9.09K	RN55D-9091F	TRW	4701-03-9091	1
R22 R33	RES,MF,1/8W,1%,9.53K	RN55D-9531F	TRW	4701-03-9531	2
CR2 CR3	DIODE	1N4581	MICRO	4801-01-4581	2
CR1 CR4 CR5	DIODE	FD-6666	FAIR	4807-02-6666	3
Q1 Q2 Q3 Q4 Q5 Q6	TRANS	2N3642	FAIR	4901-03-6420	6
Q7 Q8 Q9	TRANS	2N4248	FAIR	4901-04-2480	3
IC1 IC2 IC3	IC,CLASS II,MA-709 UTC:U7709-07-0900	130-501-14	WVTK	7200-00-0006	3

WAVETEK PARTS LIST	TITLE 6V POWER	ASSEMBLY NO. 1100-00-0089 PAGE: 2	REV A

NOTE: UNLESS OTHERWISE SPECIFIED

REMOVE ALL BURRS AND BREAK SHARP EDGES	DRAWN	DATE	WAVETEK SAN DIEGO • CALIFORNIA
MATERIAL	PROJ ENGR		TITLE 6V, 23V POWER SUPPLY
	RELEASE APPROV		
FINISH WAVETEK PROCESS	TOLERANCE UNLESS OTHERWISE SPECIFIED XXX ±.010 ANGLES ±1° XX ±.030		
	DO NOT SCALE DWG		MODEL NO. 154 / DWG NO. 1100-00-0089 / REV A
	SCALE		CODE IDENT 23338 / SHEET OF

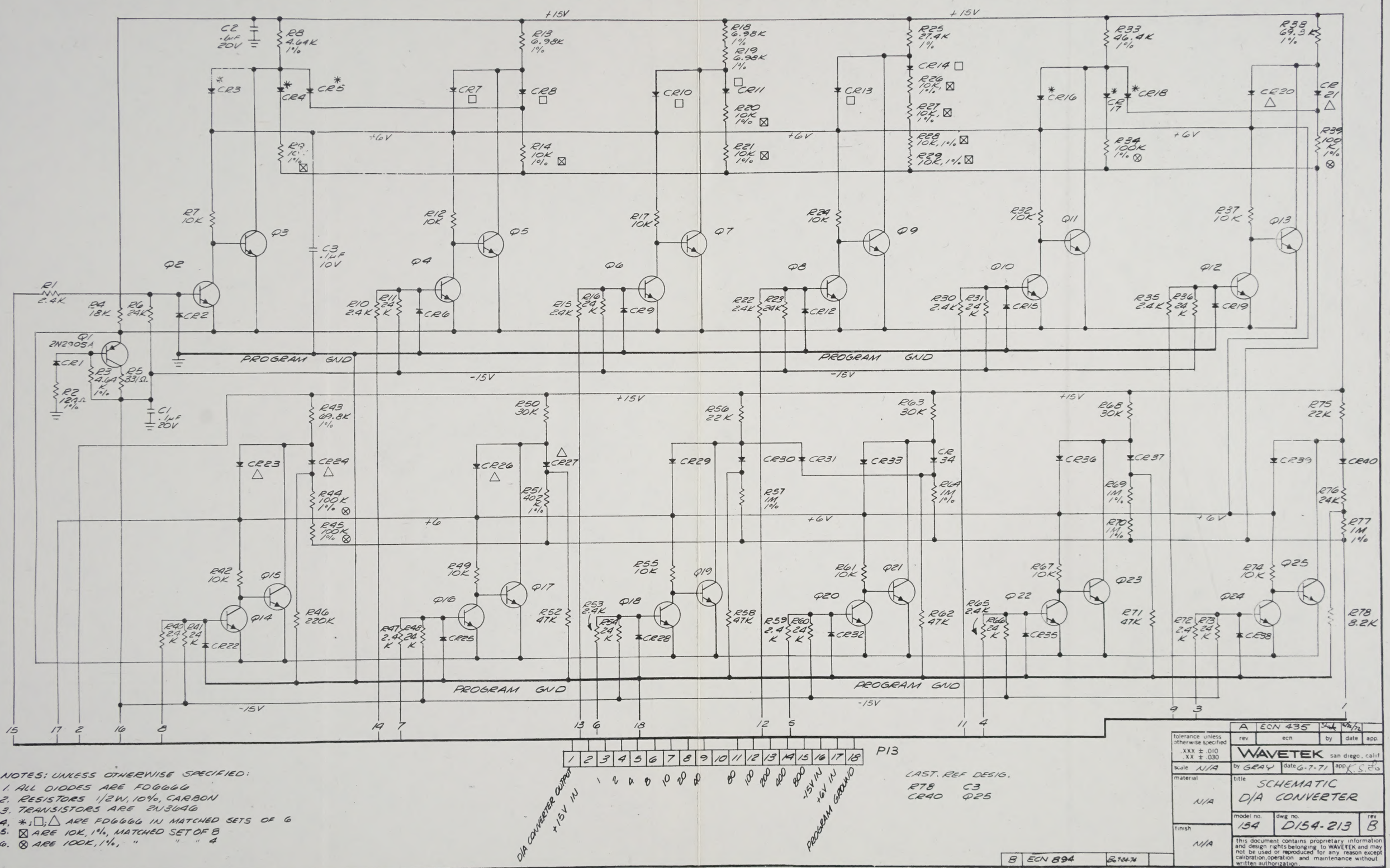

NOTES: UNLESS OTHERWISE SPECIFIED:
1. ALL DIODES ARE FD6666
2. RESISTORS 1/2W, 10%, CARBON
3. TRANSISTORS ARE 2N3646
4. *; □; △ ARE FD6666 IN MATCHED SETS OF 6
5. ⊠ ARE 10K, 1%, MATCHED SET OF 8
6. ⊗ ARE 100K, 1%, " " " 4

LAST. REF DESIG.
R78 C3
CR40 Q25

rev	ecn	by	date	app.
A	ECN 435			
B	ECN 894			

tolerance unless otherwise specified .XXX ± .010 .XX ± .030

scale N/A

material N/A

finish N/A

WAVETEK san diego, calif

by GRAY date 6-7-71 app. K.S.

title SCHEMATIC D/A CONVERTER

model no. 154 dwg no. D154-213 rev B

this document contains proprietary information and design rights belonging to WAVETEK and may not be used or reproduced for any reason except calibration, operation and maintenance without written authorization.

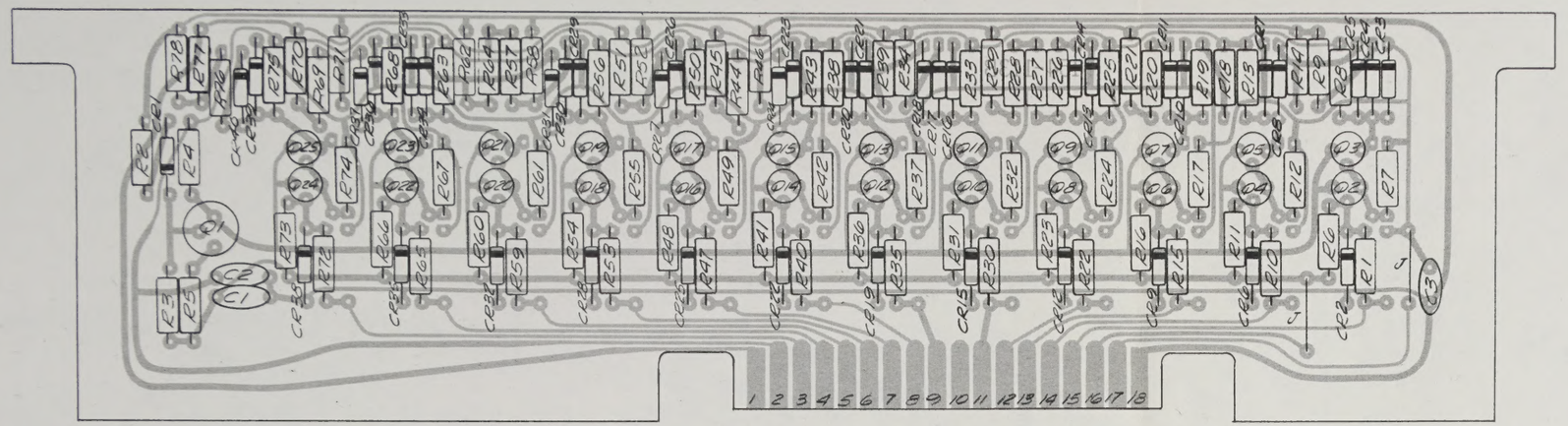

PARTS LIST

ITEM	REF DES	DESCRIPTION	MFGR	MFGR NO.	QTY
1		CAPACITORS			
2	C3	CERAMIC DISC, 10V, 10%, .1uF	CRL	UK10-104	1
3	C1, C2	20V,		UK20-104	2
4					
5					
6		DIODES			
7	CR1, CR2, CR6, CR9, CR12, CR15, CR19, CR22, CR25, CR28-CR30	FD6666	FAIRCHILD	FD6666	22
8	CR3-CR5, CR16-CR18	-67			6
9	CR7, CR8, CR10, CR11, CR13, CR14	-69			6
10	CR20, CR21, CR23, CR24, CR26, CR27	-69			6
11					
12					
13		RESISTORS			
14		CARBON, 1/2W, 10%	STACKPOLE	RC20GF	
15	R1, R10, R15, R22, R30, R35, R40, R47, R53, R59, R65, R72	5% 2.4K		242J	12
16	R7, R12, R17, R24, R32, R37, R42, R49, R55, R61, R67, R74	10% 10K		103K	12
17	R4	5% 18K		183J	1
18	R56, R75	10% 22K		223K	2
19	R6, R11, R21, R23, R31, R36, R41, R48, R54, R60, R66, R73, R76	5% 24K		243J	13
20	R50, R63, R68	30K		303J	3
21	R52, R58, R62, R71	10% 47K		473K	4
22	R78	8.2K		822K	1
23	R46	10% 220K		224K	1
24					
25					

PARTS LIST

ITEM	REF DES	DESCRIPTION	MFGR	MFGR NO.	QTY
26	R2	METAL FILM, 1/4W, 1%, 1241	CORNING	RN60D	1
27	R3, R8	4.64K			2
28	R13, R18, R19	6.98K			3
29					
30	R25	27.4K			1
31	R33	46.4K			1
32	R38, R43	69.8K			2
33					
34	R51	402K			1
35	R57, R64, R69, R70, R77	1M			5
36	R5	332Ω		RN60D	1
37					
38	R9, R14, R20, R21, R26-R29	-67 10K			8
39	R34, R39, R44, R45	-68 100K			4
40					
41					
42					
43		TRANSISTORS			
44	Q1	2N2905A	FAIRCHILD	2N2905A	1
45	Q2-Q25	2N3646		2N3646	24
46					
47					
48					
49		CIRCUIT BOARD	WAVETEK	154-1138	1
50					
51					
52					

rev	ecn	by	date	app.
B	ECN 894	B.	9-24-74	
A	ECN 474	B.	7-27-72	

tolerance unless otherwise specified .XXX ± .010 .XX ± .030

WAVETEK san diego, calif

scale 2/1 | by GRAY | date 6-11-71 | app. K.C.

material N/A

title ASSEMBLY, D-A CONVERTER

finish N/A

model no. 154 | dwg no. 0154-013 | rev B

this document contains proprietary information and design rights belonging to WAVETEK and may not be used or reproduced for any reason except calibration, operation and maintenance without written authorization

THIS DOCUMENT CONTAINS PROPRIETARY INFORMATION AND DESIGN RIGHTS BELONGING TO WAVETEK AND MAY NOT BE REPRODUCED FOR ANY REASON EXCEPT CALIBRATION, OPERATION, AND MAINTENANCE WITHOUT WRITTEN AUTHORIZATION.

REV	ECN	BY	DATE	APP

REFERENCE DESIGNATORS	PART DESCRIPTION	ORIG-MFGR-PART-NO	MFGR	WAVETEK NO.	QTY/PT
NONE	ASSY DWG,D-A CONV	0101-00-0083	WVTK	0101-00-0083	1
NONE	SCHEMATIC,D-A CONV	0103-00-0083	WVTK	0103-00-0083	1
C3	CAP,CER,.1MF,10V	UK10-104	ARCO	1500-01-0412	1
C1 C2	CAP,CER,.1MF,20V	UK20-104	ARCO	1500-01-0413	2
NONE	D-A CONV	154-113	WVTK	1700-00-0083	1
NONE	TRANSIPAD	10123N	METRS	2800-11-0003	1
R12 R17 R24 R32 R37 R42 R49 R55 R61 R67 R7 R74	RES,MF,1/8W,1%,10K	RN55D-1002F	TRW	4701-03-1002	12
R2	RES,MF,1/8W,1%,124	RN55D-1240F	TRW	4701-03-1240	1
R4	RES,MF,1/8W,1%,18.2K	RN55D-1822F	TRW	4701-03-1822	1
R56 R75	RES,MF,1/8W,1%,21.5K	RN55D-2152F	TRW	4701-03-2152	2
R46	RES,MF,1/8W,1%,221K	RN55D-2213F	TRW	4701-03-2213	1
R1 R10 R15 R22 R30 R35 R40 R47 R53 R59 R65 R72	RES,MF,1/8W,1%,2.37K	RN55D-2371F	TRW	4701-03-2371	12
R11 R16 R23 R31 R36 R41 R48 R54 R6 R60 R66 R73 R76	RES,MF,1/8W,1%,23.7K	RN55D-2372F	TRW	4701-03-2372	13
R25	RES,MF,1/8W,1%,27.4K	RN55D-2742F	TRW	4701-03-2742	1
R50 R63 R68	RES,MF,1/8W,1%,30.1K	RN55D-3012F	TRW	4701-03-3012	3

WAVETEK PARTS LIST	TITLE D-A CONVERTER	ASSEMBLY NO. 1100-00-0083 PAGE: 1	REV H

DDC-U BUSINESS FORMS PRINTING, INC. 2187

REFERENCE DESIGNATORS	PART DESCRIPTION	ORIG-MFGR-PART-NO	MFGR	WAVETEK NO.	QTY/PT
R33	RES,MF,1/8W,1%,46.4K	RN55D-4642F	TRW	4701-03-4642	1
R3 R8	RES,MF,1/8W,1%,4.75K	RN55D-4751F	TRW	4701-03-4751	2
R52 R58 R62 R71	RES,MF,1/8W,1%,47.5K	RN55D-4752F	TRW	4701-03-4752	4
R13 R18 R19	RES,MF,1/8W,1%,6.98K	RN55D-6981F	TRW	4701-03-6981	3
R38 R43	RES,MF,1/8W,1%,69.8K	RN55D-6982F	TRW	4701-03-6982	2
R78	RES,MF,1/8W,1%,8.25K	RN55D-8251F	TRW	4701-03-8251	1
R57 R64 R69 R70 R77	RES,MF,1/4W,1%,1M	RN60D-1004F	TRW	4701-13-1004	5
R5	RES,MF,1/4W,1%,332	RN60D-3320F	TRW	4701-13-3320	1
R51	RES,MF,1/4W,1%,402K	RN60D-4023F	TRW	4701-13-4023	1
R14 R20 R21 R26 R27 R28 R29 R9	RES,SET,8-10K,1/8W QTY:8:4701-03-1002	154-500-67	WVTK	4789-00-0020	1
R34 R39 R44 R45	RES,SET,4-100K,1/8W QTY:4:4701-03-1003	154-500-68	WVTK	4789-00-0027	1
CR1 CR12 CR15 CR19 CR2 CR22 CR25 CR28 CR29 CR30 CR31 CR32 CR33 CR34 CR35 CR36 CR37 CR38 CR39 CR40 CR6 CR9	DIODE	FD-6666	FAIR	4807-02-6666	22
CR10 CR11 CR13 CR14 CR16 CR17 CR18 CR20 CR21 CR23 CR24 CR26 CR27 CR3 CR4 CR5 CR7 CR8	DIODE,SET,6-FD-6666 QTY:6:4807-02-6666	154-500-69	WVTK	4898-00-0001	3

WAVETEK PARTS LIST	TITLE D-A CONVERTER	ASSEMBLY NO. 1100-00-0083 PAGE: 2	REV H

DDC-U BUSINESS FORMS PRINTING, INC. 2187

REFERENCE DESIGNATORS	PART DESCRIPTION	ORIG-MFGR-PART-NO	MFGR	WAVETEK NO.	QTY/PT
Q1	TRANS	2N2905A	FAIR	4901-02-9051	1
Q10 Q11 Q12 Q13 Q14 Q15 Q16 Q17 Q18 Q19 Q2 Q20 Q21 Q22 Q23 Q24 Q25 Q3 Q4 Q5 Q6 Q7 Q8 Q9	TRANS	2N3646	FAIR	4901-03-6460	24

WAVETEK PARTS LIST	TITLE D-A CONVERTER	ASSEMBLY NO. 1100-00-0083 PAGE: 3	REV H

DDC-U BUSINESS FORMS PRINTING, INC. 2187

NOTE: UNLESS OTHERWISE SPECIFIED

REMOVE ALL BURRS AND BREAK SHARP EDGES	DRAWN	DATE	WAVETEK SAN DIEGO • CALIFORNIA
MATERIAL	PROJ ENGR		TITLE D-A CONVERTER
	RELEASE APPROV		
FINISH WAVETEK PROCESS	TOLERANCE UNLESS OTHERWISE SPECIFIED XXX ±.010 ANGLES ±1° XX ±.030		
	DO NOT SCALE DWG		MODEL NO. 154 / DWG NO. 1100-00-0083 / REV B
	SCALE		CODE IDENT 23338 / SHEET OF

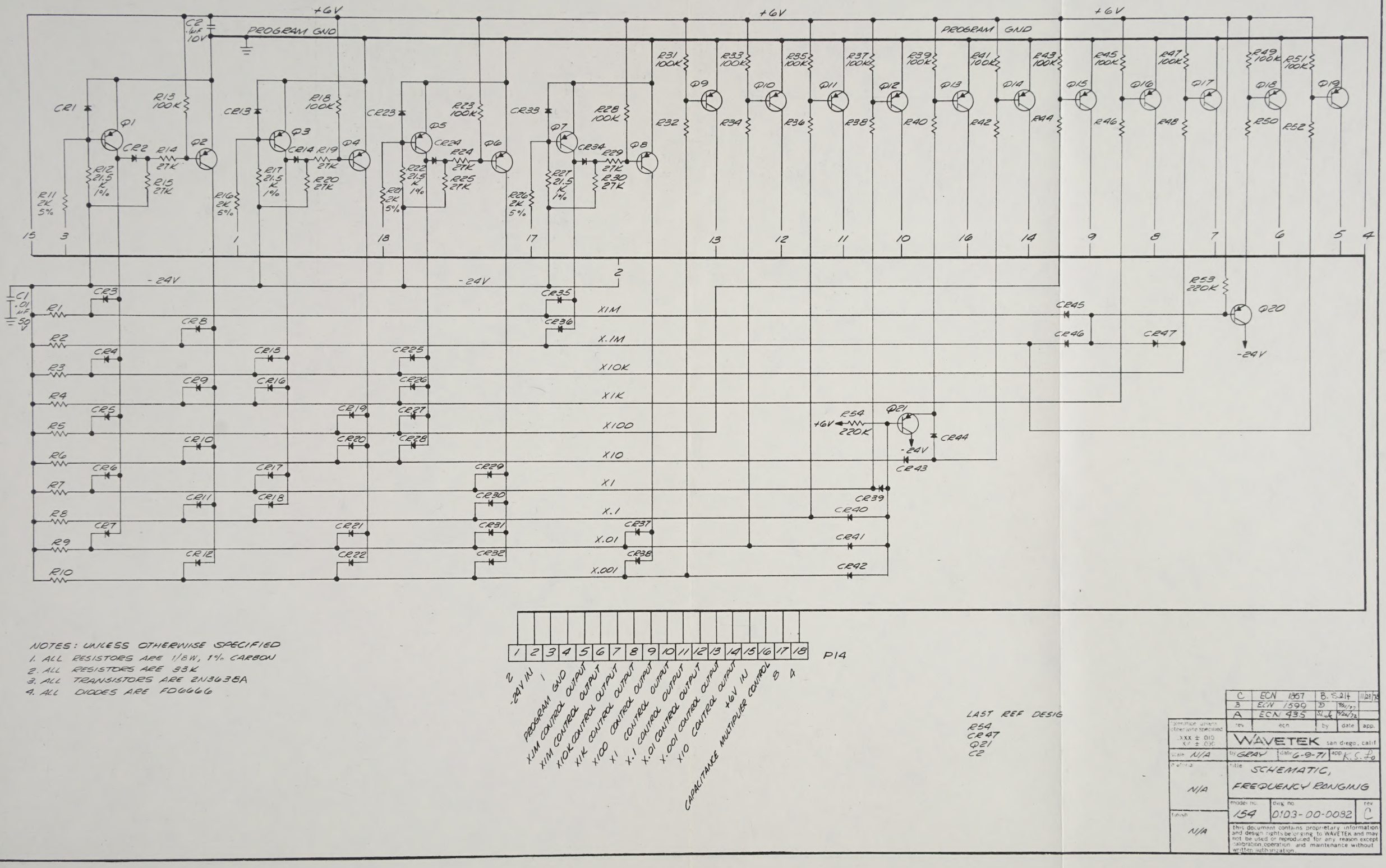

NOTES: UNLESS OTHERWISE SPECIFIED
1. ALL RESISTORS ARE 1/8W, 1% CARBON
2. ALL RESISTORS ARE 33K
3. ALL TRANSISTORS ARE 2N3638A
4. ALL DIODES ARE FD6666

LAST REF DESIG
R54
CR47
Q21
C2

rev	ecn	by	date	app.
C	ECN 1857	B. S.214		11/28/78
B	ECN 1599	D	9/31/77	
A	ECN 435	Shook	9/26/72	

Tolerance unless otherwise specified .XXX ± .010 .XX ± .030

WAVETEK san diego, calif

scale N/A | by GRAY | date 6-9-71 | app. K.S. Lo

material N/A

title SCHEMATIC, FREQUENCY RANGING

model no. 154 | dwg no. 0103-00-0082 | rev C

finish N/A

this document contains proprietary information and design rights belonging to WAVETEK and may not be used or reproduced for any reason except calibration, operation and maintenance without written authorization.

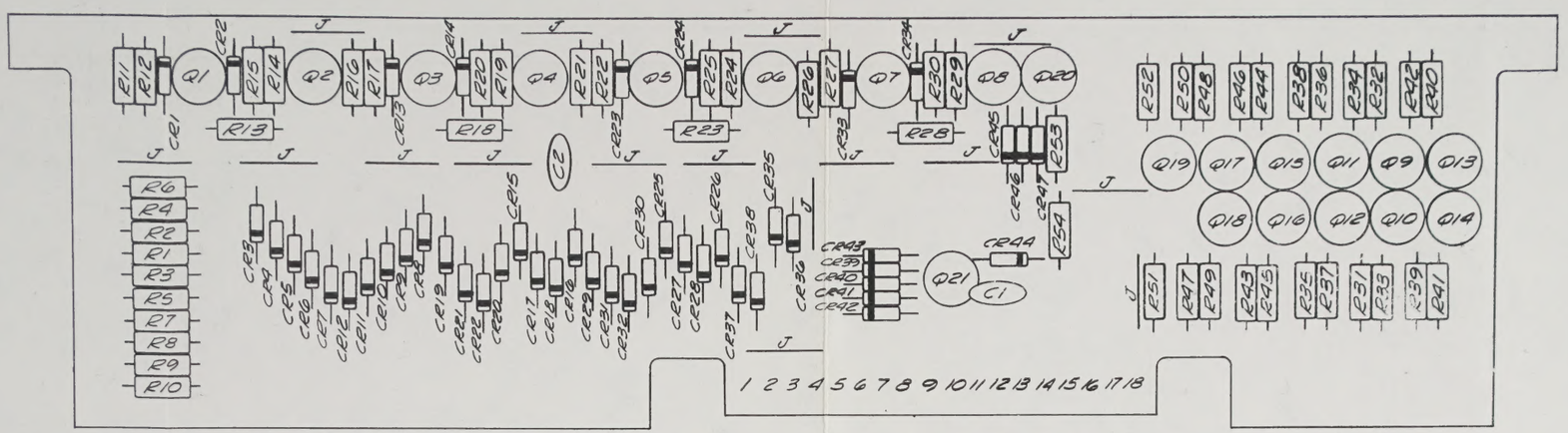

	A	ECN 1857	PVB	12-5-78	
	rev	ecn	by	date	app.

tolerance unless otherwise specified
.XXX ± .010
.XX ± .030

WAVETEK san diego, calif

scale 2/1

by GRAY | date 6-16-71 | app. K. S. Lo

material N/A

title ASSEMBLY FREQ RANGING

model no. 154 | dwg no. 0101-00-0082 | rev A

finish N/A

this document contains proprietary information and design rights belonging to WAVETEK and may not be used or reproduced for any reason except calibration, operation and maintenance without written authorization.

THIS DOCUMENT CONTAINS PROPRIETARY INFORMATION AND DESIGN RIGHTS BELONGING TO WAVETEK AND MAY NOT BE REPRODUCED FOR ANY REASON EXCEPT CALIBRATION, OPERATION, AND MAINTENANCE WITHOUT WRITTEN AUTHORIZATION.

REV	ECN	BY	DATE	APP

REFERENCE DESIGNATORS	PART DESCRIPTION	CMIC-MFGR-PART-NO	MFGR	WAVETEK NO.	QTY/PT
NONE	ASSY DRWG,MATRIX	0101-00-0082	WVTK	0101-00-0082	1
NONE	SCHEMATIC,MATRIX	0103-00-0082	WVTK	0103-00-0082	1
C1	CAP,CER,.01MF,50V	CK-103	CRL	1500-01-0310	1
C2	CAP,CER,.1MF,10V	UK10-104	CRL	1500-01-0412	1
NONE	RANGE MATRIX	154-112	WVTK	1700-00-0082	1
NONE	TRANSIPAD	10123M	METRS	2800-11-0003	21
R13 R16 R23 R28 R31 R33 R35 R37 R39 R41 R43 R45 R47 R49 R51	RES,MF,1/8W,1%,100K	RN55D-1003F	TRW	4701-03-1003	15
R11 R16 R21 R26	RES,MF,1/8W,1%,2K	RN55D-2001F	TRW	4701-03-2001	4
R12 R17 R22 R27	RES,MF,1/8W,1%,21.5K	RN55D-2152F	TRW	4701-03-2152	4
R53 R54	RES,MF,1/8W,1%,221K	RN55D-2213F	TRW	4701-03-2213	2
R14 R15 R19 R20 R24 R25 R29 R30	RES,MF,1/8W,1%,27.4K	RN55D-2742F	TRW	4701-03-2742	8
R1 R10 R2 R3 R32 R34 R36 R38 R4 R40 R42 R44 R46 R48 R5 R50 R52 R6 R7 R8 R9	RES,MF,1/8W,1%,33.2K	RN55D-3322F	TRW	4701-03-3322	21
CR1 CR10 CR11 CR12 CR13 CR14 CR15 CR16 CR17 CR18 CR19 CR2 CR20 CR21 CR22 CR23	DIODE	FD-0000	FAIR	4607-02-0000	47

WAVETEK PARTS LIST	TITLE RANGE MATRIX	ASSEMBLY NO. 1100-00-0082 PAGE: 1	REV A

REFERENCE DESIGNATORS	PART DESCRIPTION	CMIC-MFGR-PART-NO	MFGR	WAVETEK NO.	QTY/PT
CR24 CR25 CR26 CR27 CR28 CR29 CR3 CR30 CR31 CR32 CR33 CR34 CR35 CR36 CR37 CR38 CR39 CR4 CR40 CR41 CR42 CR43 CR44 CR45 CR46 CR47 CR5 CR6 CR7 CR8 CR9					
Q1 Q10 Q11 Q12 Q13 Q14 Q15 Q16 Q17 Q18 Q19 Q2 Q20 Q21 Q3 Q4 Q5 Q6 Q7 Q8 Q9	TRANS	2N3638A	CRTW	4901-03-3381	21

WAVETEK PARTS LIST	TITLE RANGE MATRIX	ASSEMBLY NO. 1100-00-0082 PAGE: 2	REV A

NOTE: UNLESS OTHERWISE SPECIFIED

REMOVE ALL BURRS AND BREAK SHARP EDGES	DRAWN	DATE	WAVETEK SAN DIEGO • CALIFORNIA
MATERIAL	PROJ ENGR		TITLE FREQUENCY RANGING
	RELEASE APPROV		
FINISH WAVETEK PROCESS	TOLERANCE UNLESS OTHERWISE SPECIFIED XXX ±.010 ANGLES ±1° XX ±.030		
	DO NOT SCALE DWG		MODEL NO. 154 / DWG NO. 1100-00-0082 / REV A
	SCALE		CODE IDENT 23338 / SHEET OF

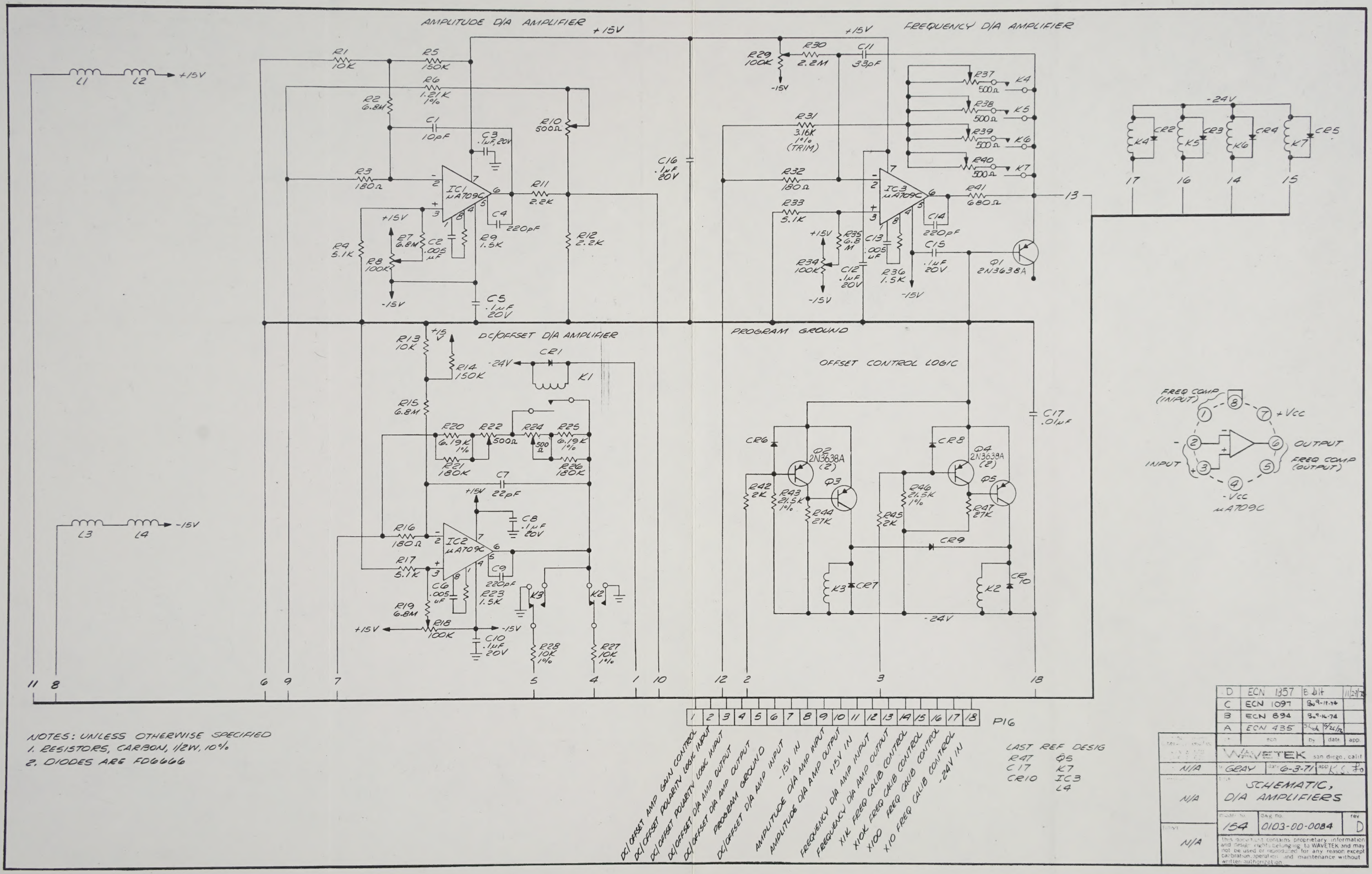

NOTES: UNLESS OTHERWISE SPECIFIED
1. RESISTORS, CARBON, 1/2W, 10%
2. DIODES ARE FD6666

LAST REF DESIG
R47 Q5
C17 K7
CR10 IC3
L4

D	ECN 1357	B. Dit		11/29/76
C	ECN 1097	B. 9-19-74		
B	ECN 894	B. 9-16-74		
A	ECN 435	SL	6/26/72	
	ecn	by	date	app.

WAVETEK san diego, calif

N/A — GRAY — date 6-3-71 — app K.C. Fo

N/A — SCHEMATIC, D/A AMPLIFIERS

N/A — model no. 154 — dwg no. 0103-00-0084 — rev D

This document contains proprietary information and design rights belonging to WAVETEK and may not be used or reproduced for any reason except calibration, operation and maintenance without written authorization.

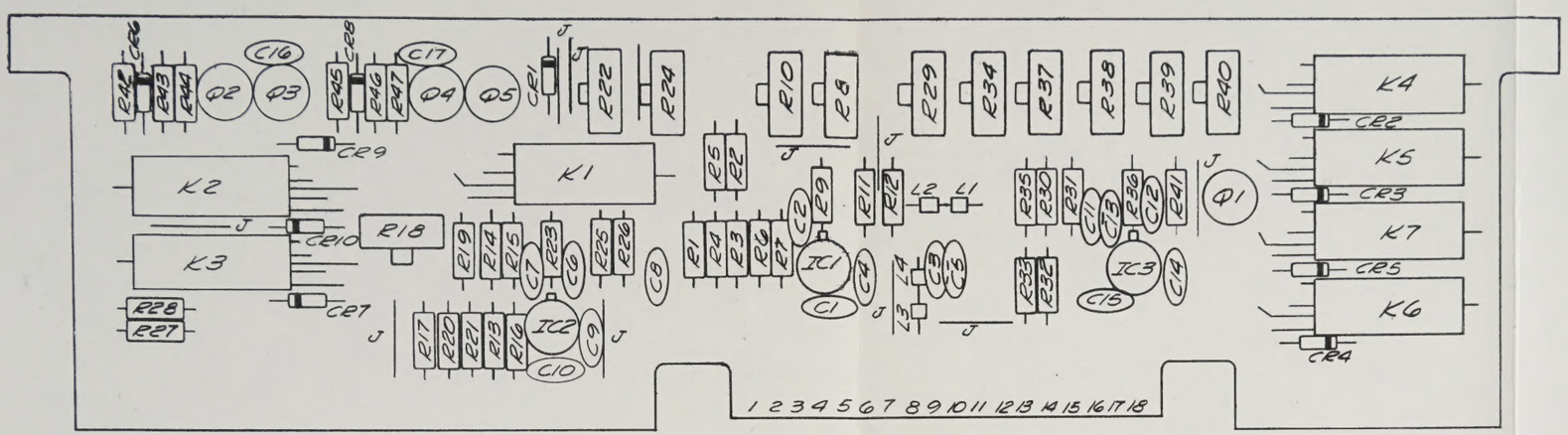
R42
C26
R43
R44
Q2
C16
Q3
R45
C28
R46
R47
C17
Q4
Q5
CR1
J
R22
R24
R10
R9
R29
R34
R37
R38
R39
R40
K4
CR2
K5
CR3
K7
CR5
K6
CR4
CR9
K2
K1
R5
R2
J
R11
R12
L2
L1
R35
R30
R31
C11
C13
R36
C12
R41
Q1
J
J
J

THIS DOCUMENT CONTAINS PROPRIETARY INFORMATION AND DESIGN RIGHTS BELONGING TO WAVETEK AND MAY NOT BE REPRODUCED FOR ANY REASON EXCEPT CALIBRATION, OPERATION, AND MAINTENANCE WITHOUT WRITTEN AUTHORIZATION.

REV	ECN	BY	DATE	APP

REFERENCE DESIGNATORS	PART DESCRIPTION	ORIG-MFGR-PART-NO	MFGR	WAVETEK NO.	QTY/PT
NONE	ASSY DRWG,AMPLIFIER	0101-00-0084	WVTK	0101-00-0084	1
NONE	SCHEMATIC,D-A AMP	0103-00-0084	WVTK	0103-00-0084	1
C1	CAP,CER,10PF,1KV	DD-100	CRL	1500-01-0011	1
C17	CAP,CER,.01MF,50V	CK-103	CRL	1500-01-0310	1
C10 C12 C15 C16 C3 C5 C8	CAP,CER,.1MF,20V	UK20-104	CRL	1500-01-0413	7
C7	CAP,CER,22PF,1KV	DD-220	AMCO	1500-02-2011	1
C14 C4 C9	CAP,CER,220PF,1KV	DD-221	AMCO	1500-02-2111	3
C11	CAP,CER,33PF,1KV	DD-330	AMCO	1500-03-3011	1
C13 C2 C6	CAP,CER,.005MF,50V	CK-502	CRL	1500-05-0210	3
NONE	D-A AMP	154-114	WVTK	1700-00-0084	1
NONE	TRANSIPAD	10123N	METWS	2800-11-0003	5
L1 L2 L3 L4	FERRITE BEAD	56-590-65/3B	FERRX	3100-00-0001	4
K1 K4 K5 K6 K7	RELAY,REED,FORM-A	PS-864	PHIPP	4500-00-0004	5
K2 K3	RELAY,REED,FORM-C	PS-865	PHIPP	4500-00-0005	2
R18 R24 R34 R8	POT,TRIM,100K	91AM100K	BECK	4600-01-0402	4
R10 R22 R24 R37 R38 R39 R40	POT,TRIM,500	91AR500	BECK	4600-05-0104	7
R30	RES,C,1/2W,10%,2.2M	RC20GF-225	STKPL	4700-25-2204	1

WAVETEK PARTS LIST	TITLE D-A AMPLIFIER	ASSEMBLY NO. 1100-00-0084 PAGE: 1	REV B

REFERENCE DESIGNATORS	PART DESCRIPTION	ORIG-MFGR-PART-NO	MFGR	WAVETEK NO.	QTY/PT
R15 R19 R2 R35 R7	RES,C,1/2W,10%,6.8M	RC20GF-685	STKPL	4700-25-6804	5
R1 R13 R27 R28	RES,MF,1/8W,1%,10K	RN55D-1002F	TRW	4701-03-1002	4
R6	RES,MF,1/8W,1%,1.21K	RN55D-1211F	TRW	4701-03-1211	1
R23 R36 R9	RES,MF,1/8W,1%,1.5K	RN55D-1501F	TRW	4701-03-1501	3
R14 R5	RES,MF,1/8W,1%,150K	RN55D-1503F	TRW	4701-03-1503	2
R21 R26	RES,MF,1/8W,1%,178K	RN55D-1783F	TRW	4701-03-1783	2
R16 R3 R32	RES,MF,1/8W,1%,200	RN55D-2000F	TRW	4701-03-2000	3
R42 R45	RES,MF,1/8W,1%,2K	RN55D-2001F	TRW	4701-03-2001	2
R43 R46	RES,MF,1/8W,1%,21.5K	RN55D-2152F	TRW	4701-03-2152	2
R11 R12	RES,MF,1/8W,1%,2.21K	RN55D-2211F	TRW	4701-03-2211	2
R44 R47	RES,MF,1/8W,1%,27.4K	RN55D-2742F	TRW	4701-03-2742	2
R31T	RES,MF,1/8W,1%,3.16K	RN55D-3161F	TRW	4701-03-3161	1
R17 R33 R4	RES,MF,1/8W,1%,4.99K	RN55D-4991F	TRW	4701-03-4991	3
R20 R25	RES,MF,1/8W,1%,6.19K	RN55D-6191F	TRW	4701-03-6191	2
R41	RES,MF,1/8W,1%,681	RN55D-6810F	TRW	4701-03-6810	1
CR1 CR10 CR2 CR3 CR4 CR5 CR6 CR7 CR8 CR9	DIODE	FD-6666	FAIR	4807-02-6666	10
Q1 Q2 Q3 Q4 Q5	TRANS	2N3638A	CAHTR	4901-03-6381	5

WAVETEK PARTS LIST	TITLE D-A AMPLIFIER	ASSEMBLY NO. 1100-00-0044 PAGE: 2	REV B

REFERENCE DESIGNATORS	PART DESCRIPTION	ORIG-MFGR-PART-NO	MFGR	WAVETEK NO.	QTY/PT
IC1 IC2 IC3	IC,CLASS I,MA-709 QTY:1:7009-07-0900	150-501-13	WVTK	7200-00-0005	3

WAVETEK PARTS LIST	TITLE D-A AMPLIFIER	ASSEMBLY NO. 1100-00-0084 PAGE: 3	REV B

NOTE: UNLESS OTHERWISE SPECIFIED

REMOVE ALL BURRS AND BREAK SHARP EDGES	DRAWN	DATE	WAVETEK SAN DIEGO • CALIFORNIA
MATERIAL	PROJ ENGR		TITLE D-A AMPLIFIER
	RELEASE APPROV		
FINISH WAVETEK PROCESS	TOLERANCE UNLESS OTHERWISE SPECIFIED XXX ±.010 ANGLES ±1° XX ±.030		MODEL NO. 154 / DWG NO. 1100-00-0084 / REV B
	DO NOT SCALE DWG		CODE IDENT 23338 / SHEET OF
	SCALE		

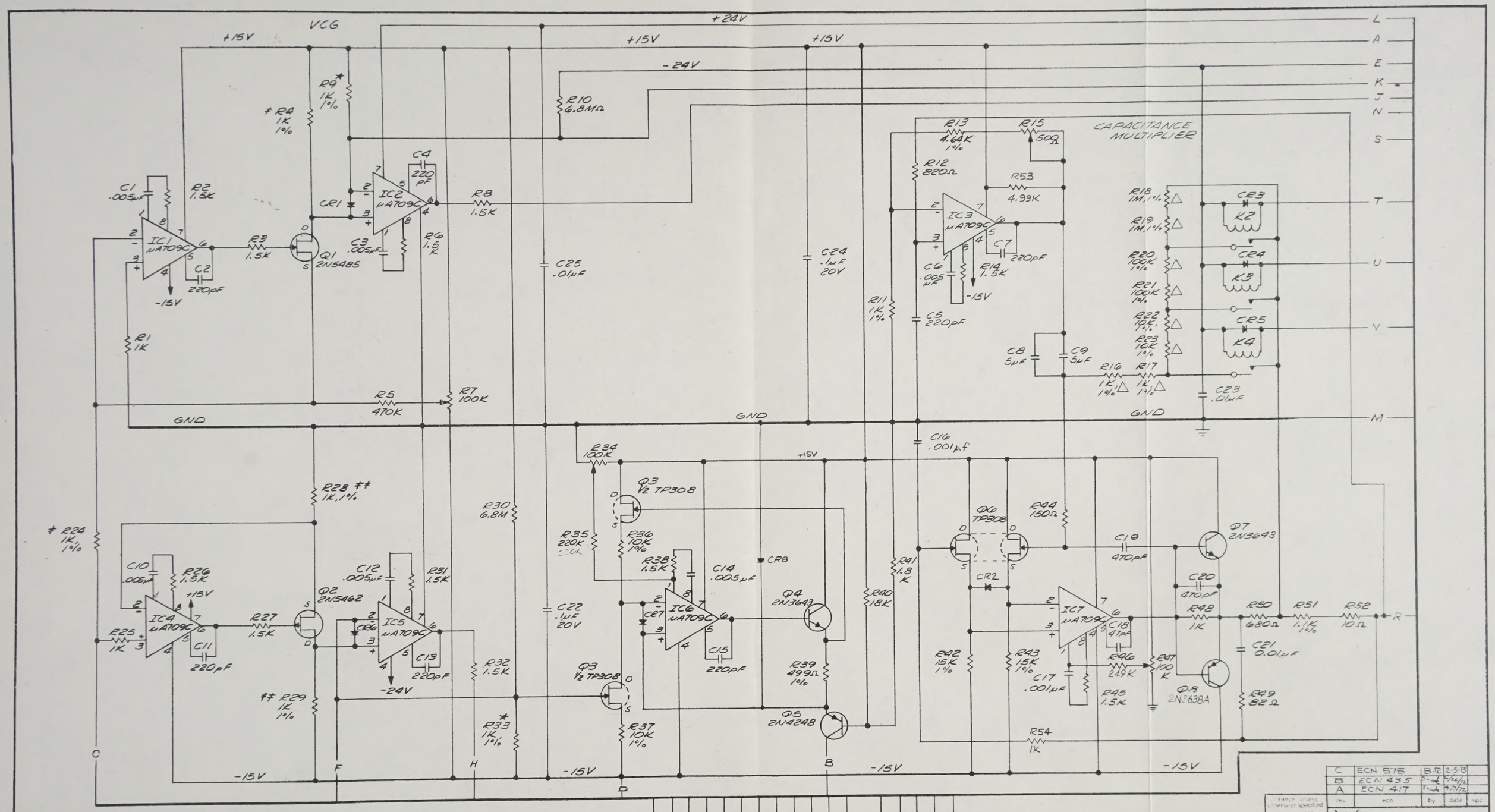

NOTES: UNLESS OTHERWISE SPECIFIED
1. RESISTORS ARE 1/8W, 1%, CARBON
2. * INDICATES MATCHED PAIR
3. ‡ INDICATES MATCHED PAIR
4. ‡‡ " " "
5. △ " " SET

LAST REF DES.
R54 Q8
C25 IC7
CR8 K4

rev	ecn	by	date	app
C	ECN 575	B.R.	2-5-73	
B	ECN 435	[illegible]	6/26/72	
A	ECN 417	[illegible]	4/7/72	

H	ECN 1857	[illegible] 11/29/78
G	ECN 1599	D 9/21/77
F	ECN 1509	RO 2-3-77
E	ECN 1096	Bo 9-16-74
D	ECN 894	Bo 9-16-74

Tolerance unless otherwise specified: XXX ± .010, XX ± .030

WAVETEK san diego calif

scale N/A | by GRAY | date 6-23-71 | app. K.S. Lo

material N/A

title SCHEMATIC, VCG BOARD

finish N/A

model no. 154 | dwg no. 0103-00-0036 | rev H

this document contains proprietary information and design rights belonging to WAVETEK and may not be used or reproduced for any reason except calibration operation and maintenance without written authorization

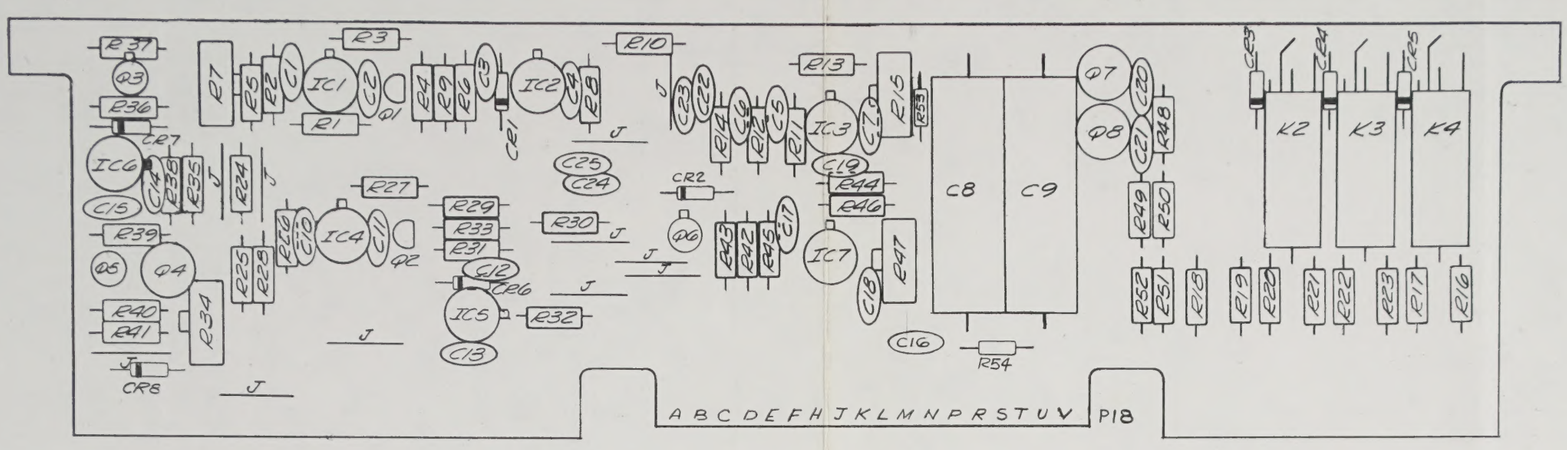

rev	ecn	by	date	app.
F	ECN 1857	PVB	12-5-78	
E	ECN 1509	Ro	2-3-77	
D	ECN 894	Bu	9-16-74	
C	ECN 1094	Bo	9-16-74	
B	ECN 575	B.R.	2-6-73	
A	ECN 435	Shek	8/26/72	

tolerance unless otherwise specified
.XXX ± .010
.XX ± .030

WAVETEK san diego, calif

scale 2/1

by GRAY date 8-23-71 app K.S. Fo

material N/A

title ASSEMBLY, VCG BOARD

finish N/A

model no. 154 dwg no. 0101-00-0086 rev F

This document contains proprietary information and design rights belonging to WAVETEK and may not be used or reproduced for any reason except calibration, operation and maintenance without written authorization.

THIS DOCUMENT CONTAINS PROPRIETARY INFORMATION AND DESIGN RIGHTS BELONGING TO WAVETEK AND MAY NOT BE REPRODUCED FOR ANY REASON EXCEPT CALIBRATION, OPERATION, AND MAINTENANCE WITHOUT WRITTEN AUTHORIZATION.

REV	ECN	BY	DATE	APP

REFERENCE DESIGNATORS	PART DESCRIPTION	ORIG-MFGR-PART-NO	MFGR	WAVETEK NO.	QTY/PT
NONE	ASSY DRWG,VCG	0101-00-0086	WVTK	0101-00-0086	1
NONE	SCHEMATIC,VCG	0103-00-0086	WVTK	0103-00-0086	1
C16 C17	CAP,CER,.001MF,1KV	DD-102	ARCO	1500-01-0211	2
C21 C23 C25	CAP,CER,.01MF,50V	CK-103	CRL	1500-01-0310	3
C22 C24	CAP,CER,.1MF,20V	UK20-104	CRL	1500-01-0413	2
C11 C13 C15 C2 C4 C5 C7	CAP,CER,220PF,1KV	DD-221	ARCO	1500-02-2111	7
C18	CAP,CER,47PF,1KV	DD-470	ARCO	1500-04-7011	1
C19 C20	CAP,CER,470PF,1KV	DD-471	ARCO	1500-04-7111	2
C1 C10 C12 C14 C3 C6	CAP,CER,.005MF,50V	CK-502	CRL	1500-05-0210	6
C8 C9	CAP,POLYC,.5MF,100V	C1A505F	ELPAC	1500-45-0504	2
J4	VCG	154-116	WVTK	1700-00-0086	1
K2 K3 K4	RELAY,REED,FORM-A	PS-864	PHIPP	4500-00-0004	3
R34 R47 R7	POT,TRIM,100K	91AR100K	BECK	4600-01-0402	3
R15	POT,TRIM,500	91AR500	BECK	4600-05-0104	1
R10 R30	RES,C,1/2W,10%,6.8M	HC20GF-685	STKPL	4700-25-6804	2
R1 R11 R25 R48 R54	RES,MF,1/8W,1%,1K	RN55D-1001F	TRW	4701-03-1001	5
R36 R37	RES,MF,1/8W,1%,10K	RN55D-1002F	TRW	4701-03-1002	2

WAVETEK PARTS LIST | TITLE V-C-G | ASSEMBLY NO. 1100-00-0086 | PAGE: 1 | REV F

REFERENCE DESIGNATORS	PART DESCRIPTION	ORIG-MFGR-PART-NO	MFGR	WAVETEK NO.	QTY/PT
	RES,MF,MIXED SET	142-501-50	WVTK	4789-00-0033	1
R16 R17	RES,MF,1/8W,1%,1K PART OF 4789-00-0033 QTY(2)				
R18 R19	RES,MF,1/8W,1%,1M PART OF 4789-00-0033 QTY(2)				
R20 R21	RES,MF,1/8W,1%,100K PART OF 4789-00-0033 QTY(2)				
R22 R23	RES,MF,1/8W,1%,10K PART OF 4789-00-0033 QTY(2)				
	DIODE	FD-6666	FAIR	4807-02-6666	5
	TRANS	2N3638A	CRTK	4901-05-4581	1
	TRANS	2N3643	FAIR	4901-05-4630	2
	TRANS	2N4248	FAIR	4901-04-2440	1
	TRANS	2N5086	MOT	4901-05-4860	1
	TRANS	TP-3078	TPS	4902-00-3080	2
	TRANS,DFL,2N5462 QTY:1:4901-05-4620	142-501-54	WVTK	4496-00-0008	1
	IC,CLASS I,MA-709	180-501-13	WVTK	7200-00-0005	7

WAVETEK PARTS LIST | TITLE V-C-G | ASSEMBLY NO. 1100-00-0086 | PAGE: 3 | REV F

REFERENCE DESIGNATORS	PART DESCRIPTION	ORIG-MFGR-PART-NO	MFGR	WAVETEK NO.	QTY/PT
R52	RES,MF,1/8W,1%,10	RN55D-10R0F	TRW	4701-03-1009	1
R51	RES,MF,1/8W,1%,1.1K	RN55D-1101F	TRW	4701-03-1101	1
R44	RES,MF,1/8W,1%,150	RN55D-1500F	TRW	4701-03-1500	1
R14 R2 R26 R27 R3 R31 R32 R38 R45 R6 R8	RES,MF,1/8W,1%,1.5K	RN55D-1501F	TRW	4701-03-1501	11
R42 R43	RES,MF,1/8W,1%,15K	RN55D-1502F	TRW	4701-03-1502	2
R41	RES,MF,1/8W,1%,1.78K	RN55D-17R1F	TRW	4701-03-1781	1
R40	RES,MF,1/8W,1%,18.2K	RN55D-1822F	TRW	4701-03-1822	1
R35	RES,MF,1/8W,1%,221K	RN55D-2213F	TRW	4701-03-2213	1
R13	RES,MF,1/8W,1%,4.64K	RN55D-4641F	TRW	4701-03-4641	1
R39	RES,MF,1/8,1%,499	RN55D-4990F	TRW	4701-03-4990	1
R53	RES,MF,1/8W,1%,4.99K	RN55D-4991F	TRW	4701-03-4991	1
R50	RES,MF,1/8W,1%,681	RN55D-6810F	TRW	4701-03-6810	1
R12	RES,MF,1/8W,1%,825	RN55D-8250F	TRW	4701-03-8250	1
R49	RES,MF,1/8W,1%,82.5	RN55D-82R5F	TRW	4701-03-8259	1
R46 R5	RES,MF,1/4W,1%,499K	RN60D-4993F	TRW	4701-13-4993	2
R24 R28 R29 R33 R4 R9	RES,SET,2-1K,1/8W QTY:2:4701-03-1001	142-501-49	WVTK	4789-00-0006	3

WAVETEK PARTS LIST | TITLE V-C-G | ASSEMBLY NO. 1100-00-0086 | PAGE: 2 | REV F

REFERENCE DESIGNATORS	PART DESCRIPTION	ORIG-MFGR-PART-NO	MFGR	WAVETEK NO.	QTY/PT
	QTY:1:7000-07-0900				

WAVETEK PARTS LIST | TITLE V-C-G | ASSEMBLY NO. 1100-00-0086 | PAGE: 4 | REV F

NOTE: UNLESS OTHERWISE SPECIFIED

REMOVE ALL BURRS AND BREAK SHARP EDGES	DRAWN	DATE	WAVETEK SAN DIEGO, CALIFORNIA
MATERIAL	PROJ ENGR		TITLE: VCG BOARD
	RELEASE APPROV		
FINISH WAVETEK PROCESS	TOLERANCE UNLESS OTHERWISE SPECIFIED XXX ±.010 ANGLES ±1° XX ±.030		MODEL NO. 154 / DWG NO. 1100-00-0086 / REV F
	DO NOT SCALE DWG		CODE IDENT. 23338 / SHEET OF
	SCALE		

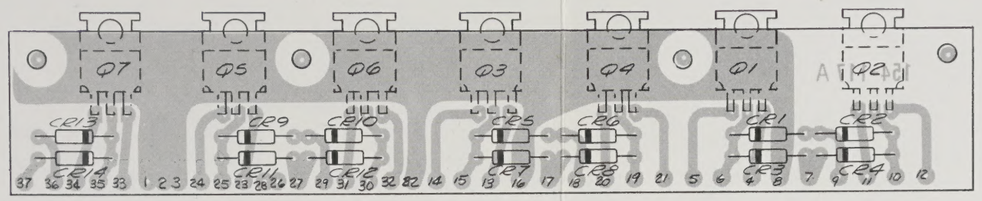

PARTS LIST

ITEM	REF DES	DESCRIPTION	MFGR	MFGR NO.	QTY
1		DIODES			
2	CR1-CR14	SCE-1	SEMITECH		14
3					
4					
5		TRANSISTORS			
6	Q1, Q3, Q5, Q7	TIP 29	TEXAS INSTRUMENT	TIP 29	4
7	Q2, Q4, Q6	TIP 30		TIP 30	3
8					
9					
10		CIRCUIT BOARD	WAVETEK	154-117-A	1
11					
12					
13					

NOTES: UNLESS OTHERWISE SPECIFIED
1. TRANSISTORS MOUNTED ON CIRCUIT SIDE

tolerance unless otherwise specified	rev	ecn	by	date	app.
.XXX ± .010 .XX ± .030	WAVETEK san diego, calif				
scale 2/1	by GRAY	date 6-30-7	app. K.S.?		
material N/A	title ASSEMBLY, TRANSISTOR MOUNTING BD				
finish N/A	model no. 154	dwg no. 0154-017	rev		

this document contains proprietary information and design rights belonging to WAVETEK and may not be used or reproduced for any reason except calibration, operation and maintenance without written authorization

THIS DOCUMENT CONTAINS PROPRIETARY INFORMATION AND DESIGN RIGHTS BELONGING TO WAVETEK AND MAY NOT BE REPRODUCED FOR ANY REASON EXCEPT CALIBRATION, OPERATION, AND MAINTENANCE WITHOUT WRITTEN AUTHORIZATION.

REV	ECN	BY	DATE	APP

REFERENCE DESIGNATORS	PART DESCRIPTION	ORIG-MFGR-PART-NO	MFGR	WAVETEK NO.	QTY/PT
NONE	TRANS MOUNTING	154-117	WVTK	1700-00-0087	1
CR1 CR10 CR11 CR12 CR13 CR14 CR2 CR3 CR4 CR5 CR6 CR7 CR8 CR9	DIODE	SCE-1	SEMTC	4801-02-0001	14
Q1 Q3 Q5 Q7	TRANS	TIP-29	TI	4902-00-0290	4
Q2 Q4 Q6	TRANS	TIP-30	TI	4902-00-0300	3

WAVETEK PARTS LIST	TITLE XISTR MTG BD	ASSEMBLY NO. 1100-00-0087 PAGE: 1	REV

NOTE: UNLESS OTHERWISE SPECIFIED

REMOVE ALL BURRS AND BREAK SHARP EDGES	DRAWN	DATE	WAVETEK SAN DIEGO • CALIFORNIA
MATERIAL	PROJ ENGR		TITLE TRANSISTOR MOUNTING BOARD
	RELEASE APPROV		
FINISH WAVETEK PROCESS	TOLERANCE UNLESS OTHERWISE SPECIFIED XXX ±.010 ANGLES ±1 XX ±.030		
	DO NOT SCALE DWG	MODEL NO. 154	DWG NO. 1100-00-0087 REV
	SCALE	CODE IDENT 23338	SHEET OF

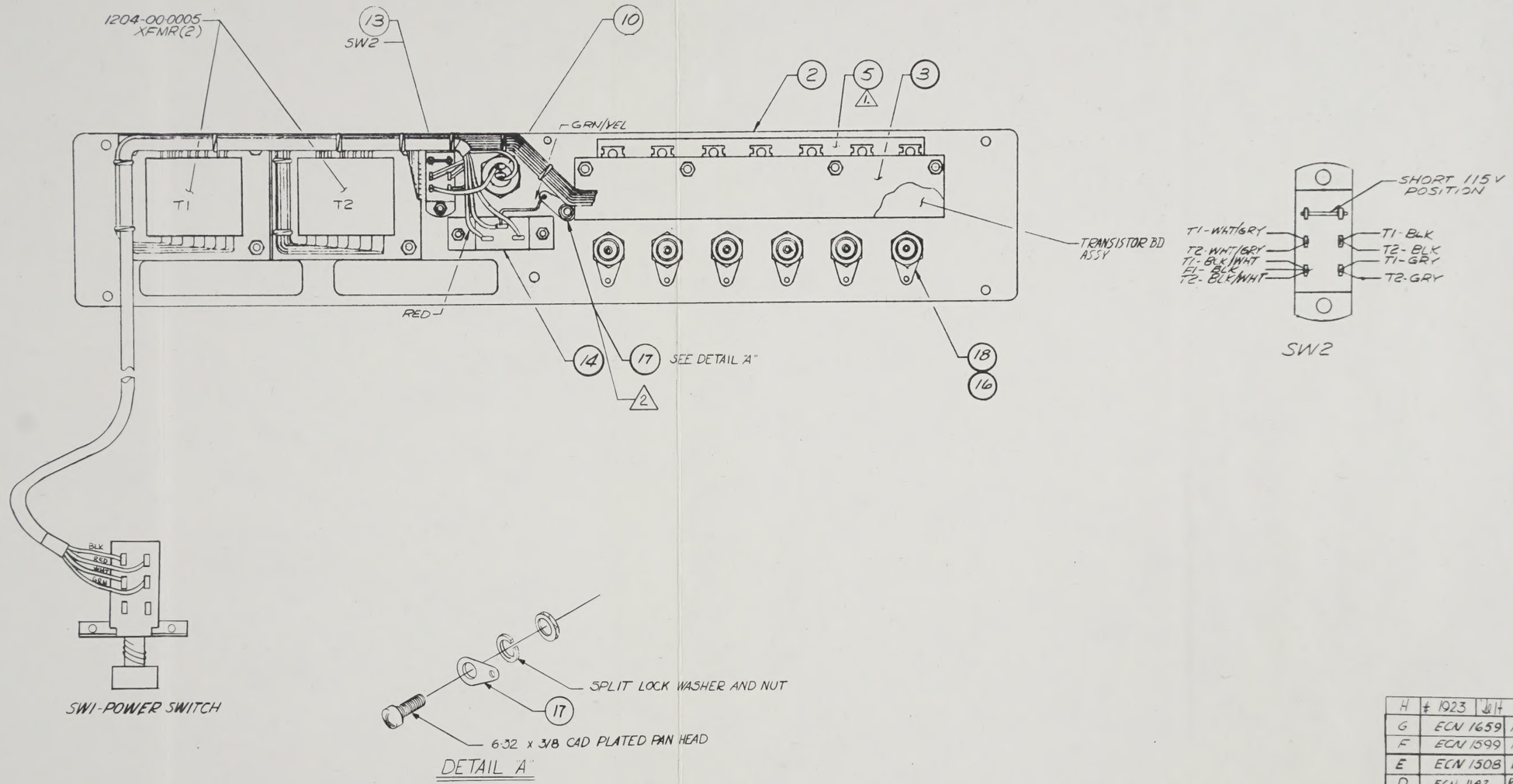

NOTES:
1. APPLY THERMAL COMPOUND TO ITEM 5 (BETWEEN REAR PANEL AND INSULATOR)
2. ALL CONNECTORS TO BE MECHANICALLY SECURE TO CHASSIS PRIOR TO SOLDERING GROUND WIRES TO LUGS.

rev	ecn	by	date	app.
H	# 1923	[illegible]	7-18-79	[illegible]
G	ECN 1659	RO	1-30-78	
F	ECN 1599	RO	9-29-77	
E	ECN 1508	RO	2-3-77	
D	ECN 1142	RO	11/15/[illegible]	
C	ECN 1102	[illegible]	9-27-76	
B	485	[illegible]	9/23/72	
A	401	[illegible]	3-2-[illegible]	

tolerance unless otherwise specified .XXX ± .010 .XX ± .030

scale N/A

material N/A

finish N/A

WAVETEK san diego, calif

by BOCHICHIO | date 8-17-71 | app. K.G. [illegible]

title REAR PANEL ASSY

model no. 154 | dwg no. 0102-00-0331 | rev H

this document contains proprietary information and design rights belonging to WAVETEK and may not be used or reproduced for any reason except calibration, operation and maintenance without written authorization.

THIS DOCUMENT CONTAINS PROPRIETARY INFORMATION AND DESIGN RIGHTS BELONGING TO WAVETEK AND MAY NOT BE REPRODUCED FOR ANY REASON EXCEPT CALIBRATION, OPERATION, AND MAINTENANCE WITHOUT WRITTEN AUTHORIZATION.

REV	ECN	BY	DATE	APP

REFERENCE DESIGNATORS	PART DESCRIPTION	ORIG-MFGR-PART-NO	MFGR	WAVETEK NO.	QTY/PT
NONE	ASSY DWG,REAR PANEL	0102-00-0331	WVTK	0102-00-0331	1
T1 T2	TRANSFORMER	142-500	WVTK	1204-00-0005	2
6	END BELL	110-333	WVTK	1400-00-0174	2
2	PANEL,REAR	154-302	WVTK	1400-00-2830	1
3	SUPT,BD	154-312	WVTK	1400-00-2900	1
5	INSULATOR	154-314	WVTK	1400-00-2910	1
NONE	I.D. LABEL	1400-00-9100	WVTK	1400-00-9100	1
J20 J21 J22 J23 J4 J5	BNC CONN	KC-7946	KING	2100-01-0002	6
J1	RECEPT,POWER	EAC-301	SWCFT	2100-03-0005	1
18	SOLDER LUG	1497	SMITH	2100-04-0012	6
17	SOLDER LUG	1485-A	SMITH	2100-04-0025	1
F1	FUSE,250V,1/2A,SB	313.500	LITFU	2400-05-0010	1
10	FUSE HOLD	031.1653/031.1000	SCHUR	2400-05-0012	1
19	WASHER,SHOULDER	2008	SMITH	2800-27-0004	6
16	NYLON FLAT WASHER	2204-N-386	AMTOM	2800-28-0005	8
SW2	SWITCH ASSY SLIDE	46236-LF	SWCFT	5105-00-0002	1
13	SOLDER GUARD	46256-LF-SG	SWCFT	5105-04-0001	1

WAVETEK PARTS LIST	TITLE	ASSEMBLY NO.	REV
	REAR PANEL ASSY	1101-00-0072	F
		PAGE: 1	

NOTE: UNLESS OTHERWISE SPECIFIED

REMOVE ALL BURRS AND BREAK SHARP EDGES	DRAWN	DATE	WAVETEK SAN DIEGO • CALIFORNIA
MATERIAL	PROJ ENGR		TITLE: REAR PANEL
	RELEASE APPROV		
FINISH WAVETEK PROCESS	TOLERANCE UNLESS OTHERWISE SPECIFIED .XXX ±.010 ANGLES ±1° .XX ±.030		
	DO NOT SCALE DWG		MODEL NO. 154 / DWG NO. 1101-00-0072 / REV F
	SCALE		CODE IDENT 23338 / SHEET OF

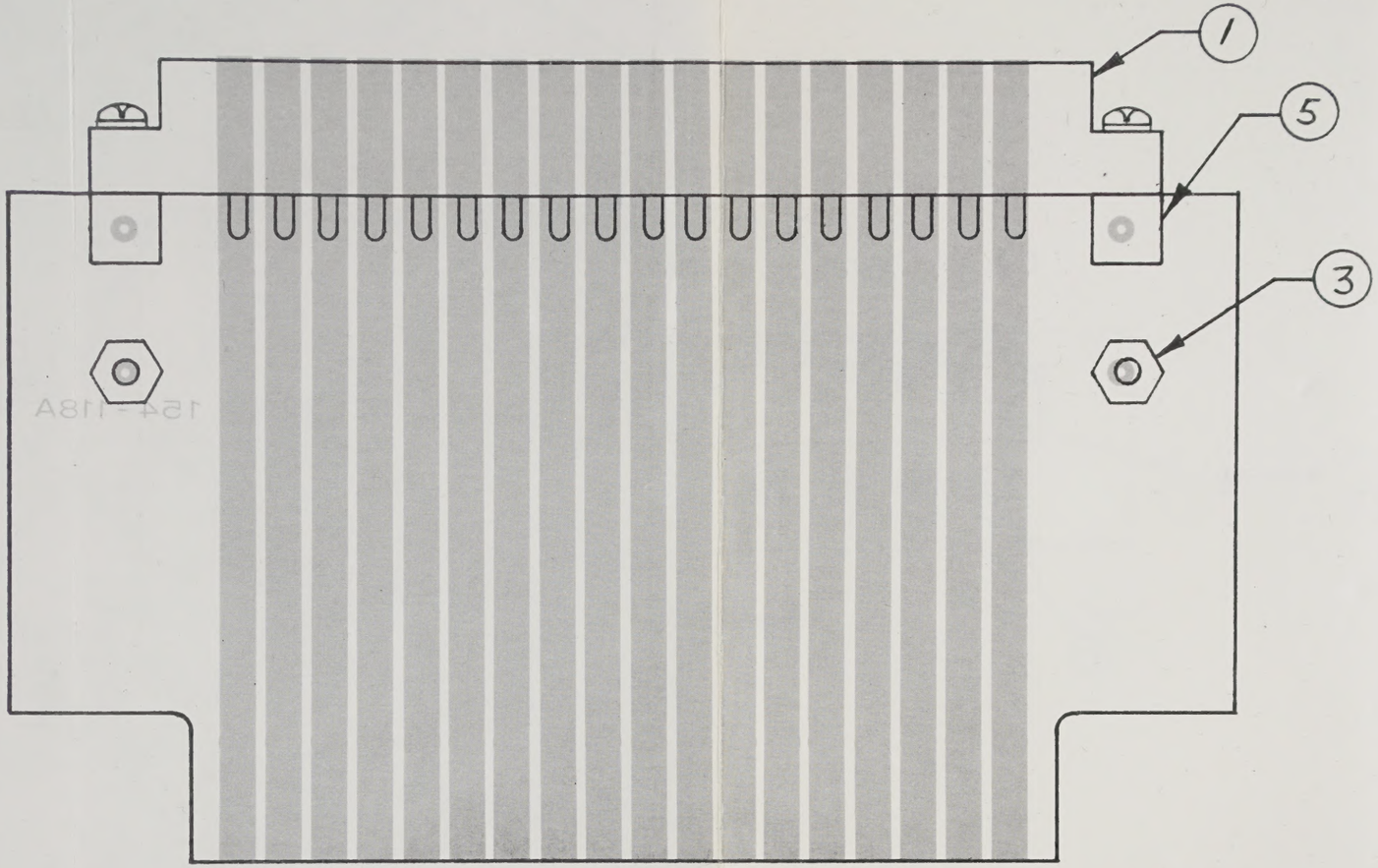

PARTS LIST

ITEM	REF DES	DESCRIPTION	MFGR	MFGR NO.	QTY
1		CONNECTOR	CINCH	252-18-30-160	1
2					
3		STANDOFF	USECO	1531-B 3/8	2
4					
5		CHASSIS BLOCK	USECO	1591-B 11	2
6					
7					
8		P.C. BOARD	WAVETEK	154-118A	1
9					

TOLERANCE UNLESS OTHERWISE SPEC
XXX ± .010
XX ± .030
ANGLES ± 0 30

SCALE 2/1

MATERIAL N/A

FINISH N/A

REV	ECN	BY	DATE	APP

WAVETEK SAN DIEGO, CALIF.

BY GRAY DATE 10-29-71 APP

TITLE ASSY, EXTENDER 80

MODEL NO. 154 DWG NO. B154-018 REV

THIS DOCUMENT CONTAINS PROPRIETARY INFORMATION AND DESIGN RIGHTS BELONGING TO WAVETEK AND MAY NOT BE REPRODUCED FOR ANY REASON EXCEPT CALIBRATION, OPERATION AND MAINTENANCE WITHOUT WRITTEN AUTHORIZATION

THIS DOCUMENT CONTAINS PROPRIETARY INFORMATION AND DESIGN RIGHTS BELONGING TO WAVETEK AND MAY NOT BE REPRODUCED FOR ANY REASON EXCEPT CALIBRATION, OPERATION, AND MAINTENANCE WITHOUT WRITTEN AUTHORIZATION.

REV	ECN	BY	DATE	APP

REFERENCE DESIGNATORS	PART DESCRIPTION	ORIG-MFGR-PART-NO	MFGR	WAVETEK NO.	QTY/PT
NONE	EXTENDER	154-118	WVTK	1700-00-0088	1
1	CONN,EDGE CARD	252-18-30-160	CINCH	2100-03-0013	1
3 3A	STANDOFF	15318-3/8	USECO	2800-02-0002	2
5 5A	FAST,CHASSIS	1591-811	USECO	2800-09-0021	2

WAVETEK PARTS LIST	TITLE EXTENDER	ASSEMBLY NO. 1100-00-0088 PAGE: 1	REV

NOTE: UNLESS OTHERWISE SPECIFIED

REMOVE ALL BURRS AND BREAK SHARP EDGES	DRAWN	DATE	WAVETEK SAN DIEGO • CALIFORNIA
MATERIAL	PROJ ENGR		TITLE EXTENDER BOARD
	RELEASE APPROV		
FINISH WAVETEK PROCESS	TOLERANCE UNLESS OTHERWISE SPECIFIED XXX ±.010 ANGLES ±1° XX ±.030		MODEL NO. 154 / DWG NO. 1100-00-0088 / REV.
	DO NOT SCALE DWG		CODE IDENT 23338 / SHEET OF
	SCALE		